Miele

# Operating and installation instructions
# Heat-pump dryer

**Always** read the operating instructions before assembly, installation and commissioning of the machine. This prevents both personal injury and damage to the machine.

en-GB

M.-Nr. 13 169 360

# Contents


**Caring for the environment** ..... **5**
Disposal of fluff or accessories ..... 5

**Warnings and safety instructions** **6**

**Operating the tumble dryer** ..... **16**
Control panel..... 16
Symbols on the control panel..... 17
Symbols on the display ..... 18
Sensor controls and touch display with sensor controls ..... 19
Main menu ..... 19
Examples of how to operate the appliance ..... 19
Selection list..... 19
Easy selection ..... 19
Setting numerical values ..... 20
Exiting a sub-menu..... 20

**Initial commissioning**..... **21**
Switching on the tumble dryer ..... 21
Setting the language ..... 21
Reference to external appliances.... 21
Setting the display brightness..... 22
Confirming the time request..... 22
Setting the time..... 22
Selecting programme packages..... 22
Setting up a payment system..... 23
Completing the commissioning process..... 24

**1. Notes on correct laundry care**... **25**
Washing ..... 25
Drying..... 25
Understanding the care label symbols ..... 25

**2. Load the tumble dryer** ..... **26**
Using a fragrance flacon..... 26

**3. Selecting a programme**..... **27**
Switching on the tumble dryer ..... 27
Selecting a programme ..... 27
Selecting standard programmes with the programme selector ..... 27
Selecting special programmes via the ☆ programme selector position ..... 27

**4. Selecting programme settings**.. **28**
Main menu for a programme..... 28
Select the drying level..... 28
Selecting the duration (timed programmes) ..... 28
Selecting extra options..... 28
Gentle tumble ..... 29
Anti-crease ..... 29
Selecting delay start ..... 29

**5. Starting the programme** ..... **31**
Starting the programme..... 31

**6. End of programme – unloading the drum** ..... **32**
End of programme ..... 32
Unloading the drum ..... 32
Observe any maintenance notes ..... 32

**Programme overview**..... **33**
Standard programmes..... 33
☆ Special programmes ..... 35
Programme packages ..... 37

**Changing the programme sequence** ..... **41**
Changing a programme once it has started ..... 41
Cancelling a programme ..... 41
Reselecting a cancelled programme..... 41
Adding laundry..... 41

**Fragrance flacon**..... **42**
Inserting a fragrance flacon ..... 42
Opening the fragrance flacon ..... 44
Closing the fragrance flacon..... 44
Removing/replacing the fragrance flacon ..... 45

**Cleaning and care** ..... **46**
When to clean ..... 46
1. When to clean the fluff filter ... 46
2. When to clean the filter in the plinth ..... 46
3. When to clean the grille in the bottom right/heat exchanger for heat dissipation ..... 47
Cleaning the fluff filters ..... 47
Removing the fragrance flacon .. 47
Removing visible fluff ..... 47
Cleaning the fluff filters and air flow openings thoroughly ..... 48
Cleaning the plinth filter ..... 50
Removing the plinth filter ..... 50
Cleaning the plinth filter ..... 51
Replacing the plinth filter ..... 52
Cleaning the filter insert (in the plinth) ..... 54
Removing the filter insert ..... 54
Check the cooling fins on the heat exchanger ..... 55
Refitting the filter insert (in the plinth) ..... 55
Refitting the fluff filter in the plinth . 56
Cleaning and closing the fluff filter flap ..... 57
Cleaning the bottom right grille/ heat exchanger ..... 57
Removing the grille ..... 57
Cleaning the cooling fins ..... 58
Replacing the grille ..... 58
Cleaning the tumble dryer ..... 58

**Problem solving guide** ..... **60**
The display indicates the following messages or faults ..... 60
Unsatisfactory drying results ..... 63
The drying cycle duration is very long ..... 64
General problems with the tumble dryer ..... 65
Reactivating the plinth filter ..... 66

**Service** ..... **67**
Contact in the event of a fault ..... 67
Optional accessories ..... 67
Maintenance ..... 67
EPREL database ..... 67

**Installation** ..... **68**
Front view ..... 68
Rear view ..... 69
Locations ..... 70
Washer-dryer stack ..... 70
Dryer stack with 2 tumble dryers ..... 70
Steel plinth ..... 71
Side view ..... 71
View from above ..... 72
Transporting the tumble dryer to its installation site ..... 72
Installation ..... 73
Downtime after installation ..... 73
Levelling the tumble dryer ..... 73
Room ventilation ..... 74
External control equipment ..... 74
Hose for external drainage of condensed water ..... 74
Electrical connection ..... 76

**Consumption data** ..... **78**

**Technical data** ..... **79**
EU Conformity declaration ..... 79
UK Conformity declaration ..... 80

**Supervisor level** ..... **81**
Opening Supervisor level ..... 81
Access via code ..... 81
Change code ..... 81
Demo programme ..... 81
Opening the supervisor level ..... 81
Exiting the supervisor level ..... 81
Language ..... 82
Brightness ..... 82
Clock display ..... 82
Finish tone volume ..... 82
Keypad tone volume ..... 82

# Contents

Welcome tone volume ..... 82
Fault alarm ..... 82
Memory ..... 82
Anti-crease ..... 82
Further cooling ..... 83
Cooling down temperature ..... 83
“Display” switch-off status ..... 83
Delay start ..... 83
Programme name ..... 84
Visibility parameters ..... 84
Drying levels Cottons ..... 84
Drying levels Minimum iron ..... 84
Drying levels Automatic plus ..... 84
Drying levels Machine iron ..... 84
Clean the airways ..... 84
Programme packages ..... 85
COM mod. selection ..... 85
Field of application ..... 85
Availability of Miele digital products ..... 85
WiFi / LAN ..... 85
Network time ..... 86
Remote ..... 86
Remote update ..... 86
SmartGrid ..... 87
Legal information ..... 87
Payment system ..... 87
- Setting for payment systems ..... 87
- External programme lock ..... 88
- Time / impulse ..... 88
- Feedback signal to pay system ..... 88
- Payment system lock ..... 88
- Delete paid signal ..... 89
- Debounce time ..... 89
- Payment system overriding time 89
- Duration Cool air ..... 89
- Duration Warm air ..... 89
- FOC programmes ..... 89

## Disposing of the packaging material

The packaging material is used for handling and protects the appliance from transport damage.

Recycling the packaging material reduces the use of raw materials. Use material-specific collection points for valuable materials and take advantage of return options. Your Miele dealer will take the packaging material away.

## Disposing of your old appliance

Electrical and electronic appliances contain many valuable materials. They also contain certain materials, compounds and components which were essential for their correct functioning and safety. These could be hazardous to human health and to the environment if disposed of with household waste or if handled incorrectly. Please do not, therefore, dispose of your old appliance with household waste.

Take care not to damage your tumble dryer's pipework and heat exchanger before or during disposal in an authorised, environmentally friendly manner. This is to ensure that coolant in the tumble dryer and oil in the compressor is contained, and will not leak into the environment.

Instead, please make use of officially designated collection and disposal points to dispose of and recycle electrical and electronic appliances in your local community, with your dealer or with Miele, free of charge. By law, you are solely responsible for deleting any personal data from the old appliance prior to disposal. You are legally obliged to remove any old batteries which are not securely enclosed by the appliance and to remove any lamps without destroying them, where this is possible. These must be taken to a suitable collection point where they can be handed in free of charge. Please ensure that your old appliance poses no risk to children while being stored for disposal.

## Disposal of fluff or accessories

Abrasion causes environmentally harmful microplastic particles to be released from garments containing synthetic fibres, which remain on the laundry after washing. For this reason, dispose of the fluff collected by the fluff filters with your household waste. To prevent microplastics from spreading into the waste water system, fluff must not be drained away with the water.
Dispose of unusable accessories, e.g. empty fragrance flacons or a defective plinth filter, with your household waste.

# Warnings and safety instructions

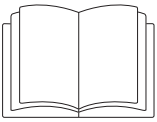

It is essential to read these instructions.

This tumble dryer contains a refrigerant that is flammable and explosive.

This tumble dryer complies with all current local and national safety requirements. However, inappropriate use can lead to personal injury and damage to property.

Read the operating instructions carefully before using the tumble dryer. They contain important information on safety, installation, use and maintenance. This prevents both personal injury and damage to the tumble dryer.

In accordance with standard IEC 60335-1, Miele expressly and strongly advises that you read and follow the instructions in the chapter on installing the tumble dryer as well as the safety instructions and warnings.

Miele cannot be held liable for damage caused by non-compliance with these instructions.

Keep these operating instructions in a safe place and pass them on to any future owner.

When instructing other people how to use the tumble dryer, they must be made aware of these safety and warning instructions.

## Correct application

▶ This tumble dryer is only intended for drying fabrics which have been washed in a water solution, and marked on the manufacturer's care label as being suitable for tumble drying. “Dry cleaning kits” for freshening up garments in a tumble dryer are increasingly available on the market. If using, do so at your own risk, and follow the instructions provided on the packaging. Any other applications may be dangerous. Miele cannot be held liable for damage resulting from incorrect or improper use or operation.

▶ This tumble dryer is intended for use at altitudes of up to 4000 m above sea level.

▶ This tumble dryer may also be operated in public areas.

▶ The tumble dryer is not intended for outdoor use.

▶ This appliance can only be used by people with reduced physical, sensory or mental capabilities, or lack of experience or knowledge, if they are supervised whilst using it or have been shown how to use it in a safe way and understand and recognise the consequences of incorrect operation.

▶ Children under 8 years of age must be kept away from the tumble dryer unless they are constantly supervised.

▶ Children 8 years and older may only use the tumble dryer unsupervised if they have been shown how to use it safely and recognise and understand the consequences of incorrect operation.

▶ Children must not be allowed to clean or maintain the tumble dryer unsupervised.

▶ Please supervise children in the vicinity of the tumble dryer and do not let them play with it.

## Technical safety

▶ Before setting up the tumble dryer, check it for any externally visible damage.
Do not install or use a damaged tumble dryer.

▶ Do not make any alterations to the tumble dryer, unless authorised to do so by Miele.

▶ Temporary or permanent operation on an autonomous power supply system or a power supply system that is not synchronised with the mains power supply (e.g. island networks, back-up systems) is possible. A prerequisite for operation is that the power supply system complies with the specifications of EN 50160 or an equivalent standard.
The function and operation of the protective measures provided in the domestic electrical installation and in this Miele product must also be maintained in isolated operation or in operation that is not synchronised with the mains power supply, or these measures must be replaced by equivalent measures in the installation. As described, for example, in the current version of BS OHSAS 18001–2 ISO 45001.

▶ Do not connect the tumble dryer to the mains electricity supply by an extension lead. Extension leads are a fire hazard and do not guarantee the required safety of the tumble dryer.

▶ If the mains connection cable is damaged it must always be replaced by a qualified specialist to protect the user from danger.

▶ The electrical safety of this tumble dryer can only be guaranteed when correctly earthed. It is essential that this standard safety requirement is met. If in any doubt, please have the on-site wiring system inspected by a qualified electrician. Miele cannot be held liable for the consequences of an inadequate earthing system (e.g. electric shock).

▶ Unauthorised repairs could result in unforeseen dangers for the user, for which the manufacturer cannot accept liability. Maintenance or repairs must only be carried out by a qualified specialist or Miele Customer Service.

▶ If defective safety-relevant components are replaced, Miele can only guarantee full compliance with safety requirements if genuine Miele replacement parts are used.

▶ To ensure the correct performance of the tumble dryer and to prevent the risk of faults and fire, it is important to carry out maintenance on a regular basis.

▶ In the event of a fault or for cleaning purposes, the tumble dryer is only completely isolated from the electricity supply when:

- it is switched off at the wall socket or the plug is withdrawn, or
- it is switched off at the mains, or the mains fuse is disconnected
- the screw-out fuse is removed (in countries where this is applicable), or it is switched off at the isolator switch.

See “Installation - Electrical connection”.

▶ This appliance must not be used in a non-stationary location (e.g. on a ship).

▶ See “Installation” and “Technical data”.

▶ The accessibility of the plug must be always ensured, in order to separate the tumble dryer from the mains. All electrical work should be carried out only by a suitably qualified and competent person, in strict accordance with national and local safety regulations.

▶ If the appliance is hard wired, adequate provision must be made on site to switch off all poles to disconnect the tumble dryer from the electrical supply.

▶ Do not block the gap between the bottom of the tumble dryer and the floor with plinth facings, deep pile carpet etc. This would hinder a sufficient flow of air to the dryer.

▶ Do not install a lockable door, a sliding door or a door which is hinged in the opposite direction to the dryer door.

▶ This tumble dryer is fitted with a special lamp to cope with particular conditions (e.g. temperature, moisture, chemical resistance, abrasion resistance and vibration). This special lamp must only be used for the purpose for which it is intended. It is not suitable for room lighting. Replacement lamps may only be fitted by a qualified specialist or by Miele Customer Service.

▶ The R290 refrigerant contained in this tumble dryer is flammable and explosive. If the tumble dryer is damaged, proceed as follows:

- Avoid naked flames or anything which creates a spark.
- Disconnect the tumble dryer from the electrical supply.
- Air the room where the tumble dryer is located.
- Contact the Miele Customer Service Department.

⚠ Risk of fire and explosion due to damage to the tumble dryer.

The refrigerant is flammable and explosive if it leaks.

Take measures to protect the tumble dryer against damage. Do not make any alterations to the tumble dryer.

▶ This tumble dryer uses a gaseous refrigerant which is condensed by the compressor. Having been increased to a high temperature level as as result of the condensing process, the refrigerant passes through a closed refrigerant circuit. The heat generated is transferred to the drying air as flows through the heat exchanger.

- The humming noises caused by the heat pump during the drying process are normal. They do not impair the efficient functioning of the tumble dryer.
- The refrigerant is environmentally friendly and causes no damage to the ozone layer.

⚠ Damage to the tumble dryer by switching it on too soon.

This can damage the heat pump.

After setting up the tumble dryer, wait for at least one hour before starting a drying programme.

## Correct use

▶ The maximum load for this tumble dryer is 8 kg (dry weight).The maximum recommended loads for individual programmes are given in the Programme chart.

▶ Do not lean on the door. Otherwise, the tumble dryer may tip over, causing injury to yourself or others.

▶ Always close the door after use. This way you will avoid the danger of:

- children climbing onto or into the dryer or hiding things in it.
- pets or other small animals climbing into it.

▶ Do not use a pressure washer or hose to clean the tumble dryer.

▶ Keep the room where the tumble dryer is located free from dust and fluff. If the air that is taken into the machine contains dirt particles, this can cause blockages. A fault may then occur and there is a risk of fire.

▶ The tumble dryer must not be used:

- without the fluff filters in place or without the filter in the plinth.
- if the fluff filters or the filter in the plinth are damaged in any way. In case of damage, the fluff filters and plinth filter must be replaced immediately.

A damaged filter would cause an excessive build-up of fluff which in turn would cause a tumble dryer fault.

▶ To ensure problem-free operation of the tumble dryer:

- Remove the fluff from the fluff filter surfaces after every drying cycle.
- The fluff filters and the plinth filter must be thoroughly dried after cleaning them with water. Wet or damp fluff filters/plinth filter could cause operational faults while drying.
- In addition, the fluff filters, filter surfaces and the air passages must be cleaned when prompted by the display.

▶ Do not install the tumble dryer in a room where there is a risk of frost occurring. At temperatures around freezing point the tumble dryer may not be able to operate properly. There is a risk of damage if the condensed water is allowed to freeze in the pump or hoses.
The ambient room temperature should be between 2°C and 35°C.

▶ If the water is drained externally through the drain hose instead of being collected in the condensed water container,
make sure the drain hose is securely attached if you hang it in a sink or basin to avoid the hose slipping and the water causing damage.

▶ Condensed water is not drinking water.
It can cause health problems in both people and animals if consumed.

▶ To prevent the risk of fire, the following textiles must not be dried in this tumble dryer:

- items which have not been washed.
- Items, such as workwear, which have not been thoroughly cleaned and which are still soiled with grease, oil or other deposits (such as cosmetics, lotions etc). If items have not been thoroughly cleaned there is a danger that these might ignite when heated, even after they have been removed from the dryer at the end of the programme.

- Items that have been soiled with substances such as acetone, petrol, kerosene, stain removers, turpentine, waxes, wax removers and other chemicals (e.g. mops and floor cloths) should be washed in hot water with extra detergent before being dried in the tumble dryer.
- Items which have been splashed with hair lacquer, hair spray, nail varnish remover or similar substances.

When washing very heavily soiled items ensure that you use sufficient detergent and select a high temperature. If in doubt wash several times before drying.

▶ Remove all items from pockets (e.g. lighters, matches).

▶ In many programmes, the heating phase is followed by a cooling down phase to ensure that the items are not too hot to handle when you remove them (this also avoids the danger of the laundry self-igniting). The programme is not finished until the cooling down phase is complete. Ensure that you always wait until the end of the programme before removing the laundry.

▶ To prevent the risk of fire, do not connect the tumble dryer via a controllable socket (e.g. a timer or a peak-load switch-off).
If the drying programme is interrupted before the end of the cooling down phase, this could cause the laundry to self-ignite.

▶ To prevent the risk of fire, the following textiles must not be dried in this tumble dryer:

- items which have been cleaned using chemicals (e.g. professional dry-cleaning agents).
- fabrics which contain a large proportion of rubber, foam rubber or rubber-like materials. For example, products made from latex foam rubber, shower caps, waterproof textiles, rubberised articles and items of clothing and pillows with foam rubber filling.
- Fabrics which contain damaged padding or fillings (e.g. pillows, jackets). When damaged, the filling can get out with the risk of it igniting in the dryer.

▶ The programme ends when the cooling phase starts. Many programmes are followed by the cooling phase to ensure that the items are not too hot to handle when you remove them (this also reduces the risk of the laundry self-igniting).
Always remove all laundry as soon as the programme has finished.

▶ Fabric conditioner and similar products must be used according to the instructions on the manufacturer's packaging.

▶ Benzine, petrol, paraffin, or any easily flammable liquid must not be stored or used near the machine. Danger of explosion.

▶ The heat pump that is essential to the operation of this tumble dryer generates a great deal of heat inside its casing. There must be a reliable means of dissipating this heat. Otherwise loads could take longer to dry or the tumble dryer might sustain damage in the long term.

The following mandatory requirements must be met:

- permanent room ventilation from the beginning to the end of every drying programme
- a gap between the floor and the bottom of the tumble dryer (this must not be blocked or obstructed in any way)

▶ Do not expose the dryer to air which is contaminated with vapour of chlorine, fluorine or other solvents. Danger of fire.

▶ For tumble dryers with stainless steel surfaces:
The stainless steel surfaces must not come into contact with liquid cleaning and disinfecting agents which contain chlorine or sodium hypochlorite. These agents can have a corrosive effect on stainless steel.
Aggressive vapours containing chlorine can also be corrosive.
Do not store containers of these agents near the tumble dryer.

▶ The manufacturer’s warranty will be invalidated if the tumble dryer is not repaired by a qualified specialist or Miele Customer Service.

## Using a fragrance flacon (optional accessory)

▶ Only ever use original Miele fragrance flacons.

▶ The fragrance flacon must be stored in its packaging so please make sure you retain this.

▶ Make sure that you always keep the fragrance flacon or the fluff filter with the flacon inserted in it in a horizontal position when carrying, and do not tip or place it down on any surface. The fragrance can leak out of the flacon.

▶ Use an absorbent cloth to wipe up any fragrance which has leaked out of the flacon onto the floor, the dryer or any dryer components (e.g. the fluff filter) immediately.

▶ If fragrance which has leaked out of a flacon: comes into contact with the **skin** - wash the skin thoroughly with soap and water; comes in contact with the **eyes** - rinse the eyes with clean water for at least 15 minutes; is swallowed - rinse out the **mouth** thoroughly with clean water. Seek medical advice in the case of contact with the eyes or if fragrance has been swallowed.

▶ If fragrance which has leaked out of a flacon comes in contact with clothing, change the clothing immediately. Wash the clothing or any cloths used for mopping up fragrance thoroughly with plenty of water and detergent.

▶ There is the risk of fire or damage to the tumble dryer if the following instructions are not observed:

- Never refill a flacon with fragrance.
- Never use a faulty fragrance flacon.

▶ Dispose of an empty fragrance flacon with the household waste and never use it for any other purpose.

▶ Please also observe the information supplied with the fragrance flacon.

## Accessories

▶ Miele assumes no liability for the use of accessories that are not genuine Miele accessories. Miele is not liable for warranty, guarantee and/or product liability claims if damage or defects are due to the use or installation of accessories that do not originate from Miele or have not been approved by Miele.

▶ The tumble dryer can also be combined with a Miele washing machine in a washer-dryer stack (stacked machines cannot go on a plinth). The appropriate “APCL” stacking kit (available to order) to match your dryer is required.

▶ Make sure that you order the correct plinth for this tumble dryer (available from Miele as an optional accessory).

▶ Miele original spare parts are kept in stock for at least 10 years and up to 15 years after discontinuation of your tumble dryer.

⚠ Miele cannot be held liable for damage caused by non-compliance with these Warning and Safety instructions.

## Control panel

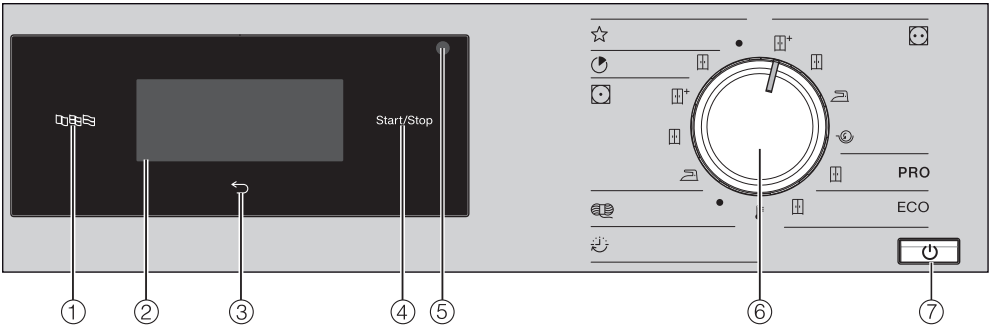


① **Language sensor control**
For selecting the current user language on the display.
The operating language is displayed again after switching the appliance on and off.

② **Touch display with sensor controls**
Displays the selected programme.
The programme settings are selected using the sensor controls in the touch display.

③ **Back sensor control**
Takes you back one level in a menu.

④ **Start/Stop sensor control**
Starts the selected programme and cancels a programme once it has started.

⑤ **Optical interface**
This is used by the Service department as a transmission point.

⑥ **Programme selector**
For selecting the drying programme.
The programme selector can be turned clockwise or anti-clockwise.

⑦ **sensor control**
For switching the tumble dryer on and off.
The tumble dryer switches off automatically to save energy. This occurs 15 minutes after the end of the programme/Anti-crease phase, or 15 minutes after being switched on if no further selection is made.

## Symbols on the control panel

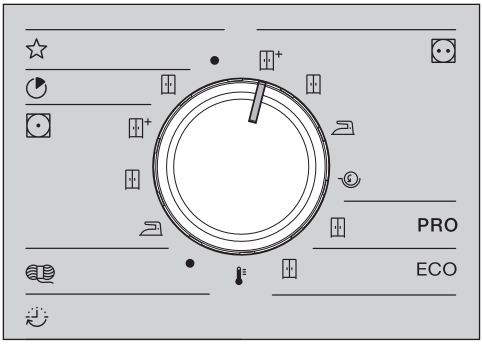


| | |
|---|---|
| ☆ | **Special programmes** |
| ◔ | **Express** |
| | Cupboard Dry |
| | **Minimum iron** |
| + | Cupboard Dry plus |
| | Cupboard Dry |
| | Hand iron |
| | **Woollens** |
| | **Timed drying programme** |
| | Hot |
| | **Cottons** |
| + | Cupboard Dry plus |
| | Cupboard Dry |
| | Hand iron |
| | Machine iron |
| PRO | **PRO Cottons** |
| | Cupboard Dry |
| ECO | **ECO** |
| | Cupboard Dry |

## Symbols on the display

**Extras**: use the *Extras* sensor control to add extras to a drying programme.

**Low temperature:** the *Low temperature* sensor control allows you to reduce the mechanical stress placed on the items while drying.

**Anti-crease:** the *Anti-crease* sensor control allows you to reduce creasing if the laundry is not removed immediately after the end of a programme.

**Delay start:** use the *Delay start* sensor control to set the starting time of a wash programme ...

... or the finish time

... or the time until the programme starts.

**Timed drying programme:** this sensor control enables you to select the duration of a timed drying programme.

**Supervisor level**: use the *Supervisor level* sensor control to alter the tumble dryer's settings.

**Information:** this allows you to view the selected options while the drying programme is running.

## Sensor controls and touch display with sensor controls

The ⊞⊟⊞, ⮌, and *Start/Stop* sensor controls and the sensor controls in the display react to finger tip contact. Every touch of a sensor control is confirmed with an audible tone. You can switch off this tone (see “Supervisor level”).

> The control panel with sensor controls and the touch display can be scratched by pointed or sharp objects, e.g. pens.
> Only touch the display with your fingers.

## Main menu

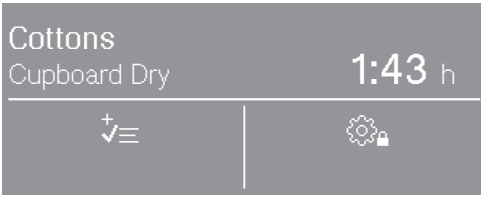


The main menu for a drying programme displays different values depending on the programme:

- The programme name of the selected programme with the selected drying level.
- The programme duration.
  - In drying level programmes (e.g. Cottons), the programme duration depends on the drying level selected and the size of the load.
  - For timed drying programmes, the programme duration can be selected freely by touching the sensor control ⏱.
- The selected extras.
- Further selectable options and settings in Supervisor level.

## Examples of how to operate the appliance

### Selection list

The ∧ and ∨ arrows on the right of the display indicate that choices are available.

The list scrolls down when the ∨ sensor control is touched. The list scrolls up when the ∧ sensor control is touched.

The scroll bar indicates that further options follow.

The currently selected language is marked with a frame.

Touch a language to select it.

### Easy selection

If there are no arrows, the selection is limited to the displayed values.

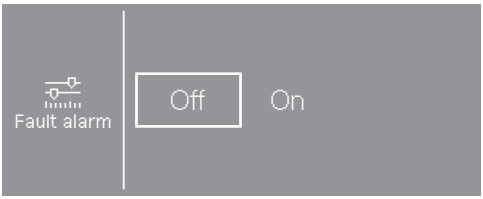


The currently selected value is marked with a frame.

Touch the required value to select it.

Alternatively, change the value using + and –.

After making your change, touch OK.

### Setting numerical values

To change a numerical value, use the ∧ and ∨ arrows above or below the numbers you want to change.

Touch the ∧ and ∨ arrows and confirm with the OK sensor control.

### Exiting a sub-menu

Select the back ⮌ sensor control to exit a sub-menu.

If you select a value in a sub-menu, but do not confirm with OK, you can discard this value by selecting the ⮌ sensor control.

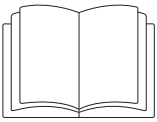

⚠ Risk of injury or damage to property due to improper installation.
Incorrect installation of the tumble dryer can lead to personal injury or damage to property.
Before commissioning the tumble dryer for the first time, make sure it has been installed and connected correctly. See “Installation”.

⚠ Damage caused by switching the appliance on too soon.
This can damage the heat pump in the tumble dryer.
After setting up the tumble dryer, wait for at least one hour before switching it on.

Follow all the steps required for initial commissioning.
During the commissioning process, you will need to define the settings for daily use of the tumble dryer. Some of the settings can only be configured during the initial commissioning process. After that, they must be changed by Miele Service.

These settings are also described under “Supervisor level”.

## Switching on the tumble dryer

- Press the ⏻ button.

The welcome screen will light up.

**Tip:** During initial commissioning, you can go back to the previous screen if you need to correct an entry you have already made.

- Touch the ⮌ sensor control to return to the previous screen.

## Setting the language

You will be asked to select the language you require for the display (supervisor language). It is possible to change the language at any time using the supervisor level.

- Touch the ∧ or ∨ sensor control until the language you want appears in the display.
- Touch the sensor control for the language you want.

The selected language is marked with a frame and the display will change to next setting.

## Reference to external appliances

A reference to external hardware appears.

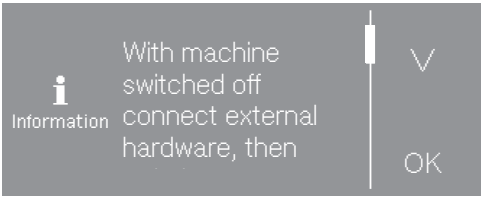


- Touch the ∨ sensor control to read all of the text in full.
- Confirm with the OK sensor control.

Before initial commissioning, connect the XCI box or slide a communication module into the slot on the back of the tumble dryer. The tumble dryer must be disconnected from the mains for this process. Then start the commissioning process.

## Setting the display brightness

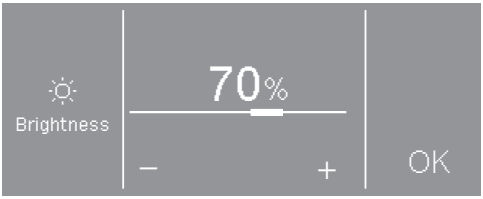


- Set the brightness you want with the – and + sensor controls and confirm your selection with the OK sensor control.

The display will change to the next setting.

## Confirming the time request

- Touch the yes or no sensor control.

If you select yes, the system will skip the time setting.

If you select no, the display will switch to the time setting.

## Setting the time

- Use the ∨ and ∧ sensor controls to enter the time and confirm your entry with OK.

The display will change to the next setting.

## Selecting programme packages

You can select various programmes packages.
The programmes selected from the programme packages are displayed under ☆ *Special programmes*.

- Touch the ∧ or ∨ sensor control until the programme package you want appears in the display.
- Touch the programme package sensor control.

The display shows the associated programmes.

The activated programmes are marked with a frame.

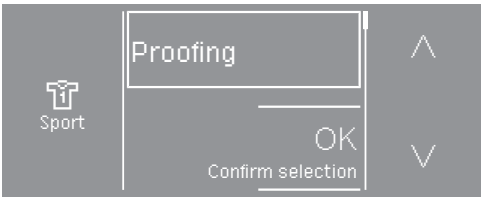


- Touch the sensors for the programmes.

The programmes are activated (framed) or deactivated (no frame).

- Confirm with the OK sensor control.

The display switches back to Programme packages.

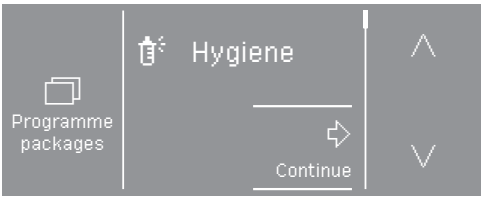


- Select other programme packages or confirm your selection with the Continue sensor control.

The display will change to the next setting.

## Setting up a payment system

This option allows you to set up an existing payment system.

If you do not wish to set up a payment system:

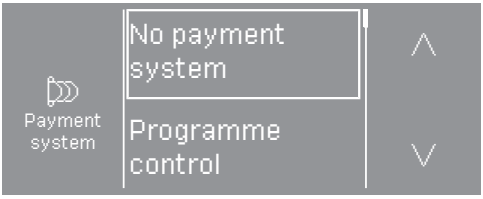


- Touch the No payment system sensor control.
- Continue reading from “Completing the commissioning process” under “Initial commissioning”.

If you wish to set up a payment system:
These settings can only be changed during the initial commissioning process. If you wish to change the settings after the commissioning process, please contact Miele Service.

- Touch the ∨ sensor control repeatedly until the setting you require appears.
- Touch the sensor control for the setting you want.

The process for setting up a payment system is described under “Payment systems” in the chapter “Supervisor level”.

## Selecting the communication module

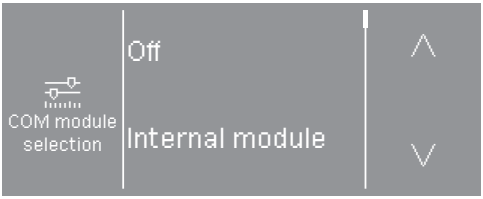


- Touch the ∧ or ∨ sensor control until the option you want appears in the display.
- Touch the Internal module sensor control if you want to use the internal communication module.
- Touch the External module sensor control if you want to use the external communication module.

The display will change to the next setting.

### Selecting the field of application

- Touch the Commercial field sensor control if you want to connect to Miele MOVE.
- Touch the Domestic field sensor control if you want to connect to the Miele app.

Setting successfully accepted appears in the display.

- Confirm the message with the *OK* sensor control.

The display will change to the next setting.

## Completing the commissioning process

To complete the commissioning process, you must run the Commissioning programme through to the end.

The programme takes 20 minutes to complete and must run with an empty drum.

If the mains supply is interrupted (or the appliance is shut down by pressing ⏻) before or during the Commissioning programme, commissioning will be cancelled. If this happens, the initial commissioning process must be repeated.

- Confirm with the *OK* sensor control.

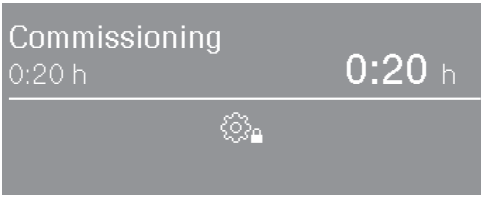


- Touch the flashing *Start/Stop* sensor control.
- When Commissioning Finish lights up, switch the tumble dryer off briefly and then switch it back on again.

Initial commissioning is complete and the tumble dryer is ready for drying.

## Washing

- Heavily soiled laundry must be washed particularly thoroughly. Use sufficient detergent and select a high temperature. If in doubt, wash the items several times.
- New, coloured items must be washed thoroughly and separately. Do not dry these items with light coloured garments. There is the risk of colours running and discolouring other garments or even plastic components in the tumble dryer. Dark coloured fluff can also settle on light coloured garments and vice versa.

## Drying

⚠ Damage due to foreign objects which were not removed from the laundry.
Foreign objects in the laundry can melt, burn or explode.
Ensure that any foreign objects (e.g. detergent dispensing aids, lighters, etc.) have been removed from the laundry.

⚠ Risk of fire due to incorrect use and operation.
The laundry can burn and destroy the tumble dryer and the surroundings.
See the section on “Warnings and safety notes” for further information.

- Check seams and stitching to ensure that the items of laundry are intact. This way you will avoid the danger of fillings coming out and causing a fire.
- Sew in or remove underwiring from bras.
- Always dry using the maximum specified load size for the programme whenever possible. A full drum helps to save energy because you don’t have to start another drying programme. This will mean that the energy consumption for the amount of laundry is at its most economical.

## Understanding the care label symbols

| | |
|---|---|
| **Drying** | |
| | Normal/higher temperature* |
| | Low temperature* |
| * In this tumble dryer, items with these symbols can be dried together thanks to the gentle drying process. | |
| | Do not tumble dry |
| **Ironing** | |
| | Very hot |
| | Hot |
| | Warm |
| | Do not iron |

## Loading the laundry

Preventing textile damage.
Before loading, read chapter “1. Notes on correct laundry care.”

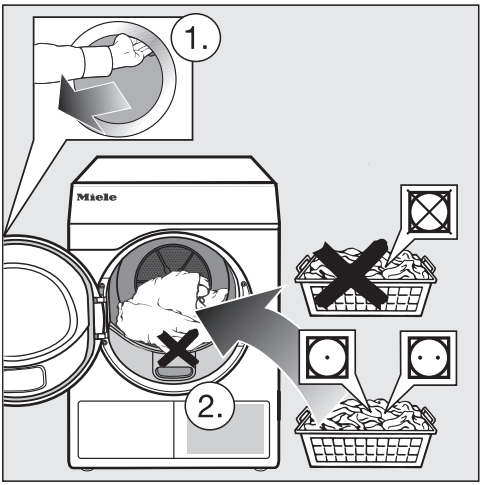


- Open the door.
- Load the laundry.

Preventing textile damage.
When closing the door, make sure that laundry does not get trapped in the door opening.

Do not overload the drum. Overloading can cause unnecessary wear and tear to the laundry and and cause a disappointing drying result. It can also cause more creasing.

## Using a fragrance flacon

You can use a fragrance flacon. If you are not using a fragrance flacon, check that the socket is closed.

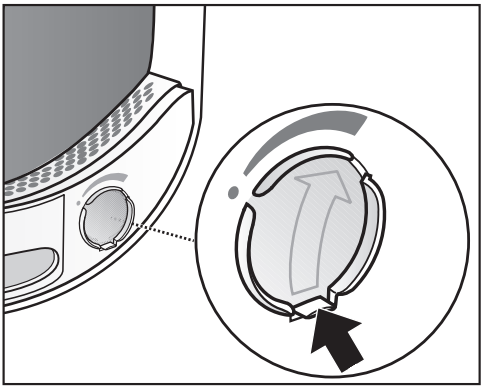

- If you are not using a fragrance flacon, push the tab down completely (see arrow). Otherwise, fluff will accumulate here.

## Closing the door

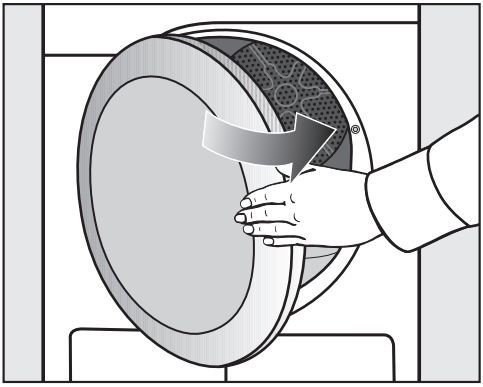

- Shut the door with a gentle swing.

## Switching on the tumble dryer

■ Press the ⏻ control.

The drum lighting will come on.

The drum lighting will automatically go out after a few minutes and/or after the start of a programme to save energy.

## Selecting a programme

### Selecting standard programmes with the programme selector

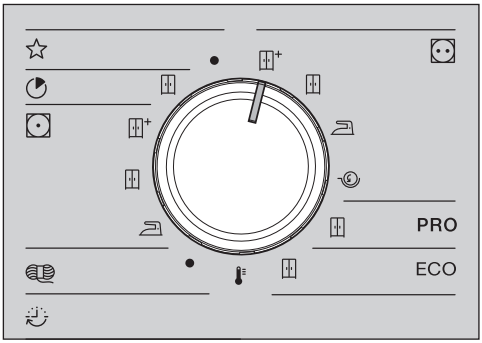


■ Turn the programme selector to the required programme.

The display will change to the standard menu for that programme.

### Selecting special programmes via the ☆ programme selector position

■ Turn the programme selector to the ☆ position.

You can select the required programme via the display.

■ Touch the ∧ or ∨ sensor control until the programme you want appears in the display.

■ Touch the sensor control for that programme.

The display will change to the standard menu for that programme.

## Main menu for a programme

### Select the drying level

The pre-set drying level for many programmes can be changed if required. Different drying levels are available depending on the programme.

- For standard programmes, you can select the drying level directly using the programme selector.
- For some programmes under ☆ *Special progs.*, you can change the drying level on the display.

■ Select a programme from ☆ *Special progs*.

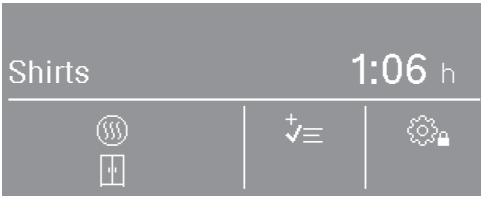


Underneath the symbol, another symbol displays the pre-set drying level (example shows *Cupboard Dry*).

■ Touch the sensor control.

■ Touch the – or + sensor control to change the drying level.

■ Touch the OK sensor control.

### Selecting the duration (timed programmes)

You can select the programme duration yourself.*

* The time frame for the selected programme duration can be limited by Miele Service.

- Timed drying warm air = 0:20-2:00 hours
- Timed drying cool air = 0:10-2:00 hours
- Basket programme = 0:20-1:30 hours
- Timed drying warm air, hygiene = 0:50-2:00 hours

■ Select one of these programmes.

The pre-set duration appears under the symbol (in this example 0:20 minutes).

■ Touch the sensor control.

■ Touch the ∧ or ∨ sensor controls to select the hours and/or minutes.

■ Touch the OK sensor control.

## Selecting extra options

The drying programmes can be augmented with various extra options.

■ Touch the sensor control.

If the symbol appears, this means that only one extra can be selected. The message Active also appears after the sensor control has been touched.

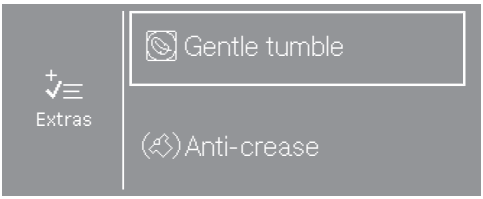


■ Touch the sensor control for the extra you want.

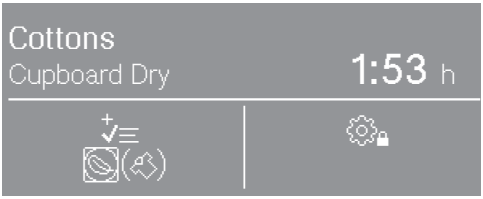


The symbol for the selected extra lights up under the sensor control.

Not all extras can be selected with every programme, only those programmes for which it makes sense.

**Gentle tumble**

Sensitive items are dried with less mechanical movement (fewer drum rotations).

**Anti-crease**

After the programme has finished, the drum will continue to rotate in a certain rhythm, depending on the selected programme. This helps to prevent creasing after the programme has ended.

The anti-crease function is switched off as the factory default setting. It can be switched on in the supervisor level with a variable duration of up to 12 hours.

## Selecting delay start

Delay start must be activated in the supervisor level to allow it to be selected. In this case, one of these 3 symbols also lights up in the display: , , .

■ Touch the sensor control with the clock symbol.

Depending on the delay start settings in the supervisor level, different delays in 15-minute intervals can be selected:

- The programme finish time: Finish at
- The programme start time: Start at
- The time to wait until the programme starts: Start in

The maximum delay start period is 24 hours. The left-hand side of the display shows what you are able to enter.

- Touch the ∧ or ∨ sensor controls to select the hours and/or minutes.
- Touch the OK sensor control.

If the delay start time is set to Finish at or Start at, the current times will be displayed.

- Touch the OK sensor control.

The start delay begins when the programme starts.

**Changing/cancelling delay start**

Before the programme starts

- Touch the sensor control with the clock symbol.
- You can change or delete the time.

After the programme has started

- Touch the *Start/Stop* sensor control.
- You can either cancel the programme or start it straight away.

## Payment systems

**Tip:** If your machine is connected to a payment system, the amount of payment required will appear in the display.

Once the programme has started, do not open the door or cancel the programme.
Depending on the settings, money may be lost in the payment system.

## Starting the programme

The programme can be started as soon as the *Start/Stop* sensor control is flashing on and off.

- Touch the *Start/Stop* sensor control.

The drying programme starts. The *Start/Stop* sensor control lights up.

If a start delay has already been selected, this starts to count down before the drying programme starts automatically.

Drying and the time left for the drying programme are displayed.

The drying level reached is displayed if a drying level programme is running.

**Tip:** Touching the **i** sensor control allows you to display the options selected.

## Programme duration/Estimated time remaining

The programme duration depends on the quantity of laundry, the type of fabric and the residual moisture in the laundry or also the water hardness. The running time for drying level programmes can therefore vary or “jump”. The tumble dryer's electronic control system adapts to these factors and then adjusts the displayed programme duration with increasing accuracy.

# 6. End of programme – unloading the drum

## End of programme

The laundry will be cooled down shortly before the end of the programme. The laundry can now be unloaded.

The programme has ended when only Finish is left on the display.

If *Anti-crease* ()* has been selected, the drum rotates in intervals. This reduces creasing if the laundry cannot be removed straight away.

* The anti-crease function is switched off as the factory default setting.

The tumble dryer will switch off automatically 15 minutes after the end of a programme.

## Unloading the drum

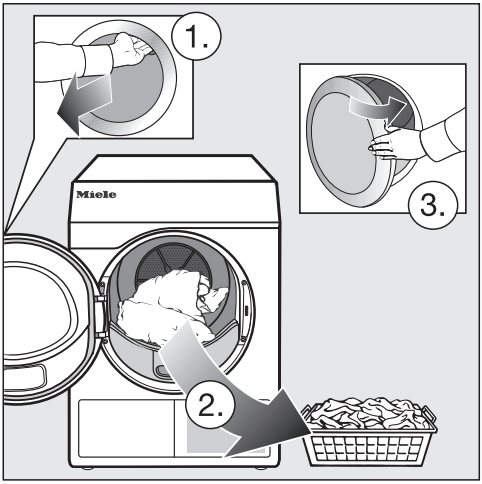


- Open the door.
- Remove everything from the drum.

Items left in the tumble dryer could be damaged by overdrying when the tumble dryer is used the next time.

Always remove all items from the drum.

- Switch the tumble dryer off.

## Observe any maintenance notes

This tumble dryer requires regular maintenance, particularly if it is used on a continuous basis.

**Tip:** Please see “Cleaning and care” for details. Read the “Cleaning the appliance at the correct intervals” section first.

All weights marked with * are based on the weight of dry laundry.

## Standard programmes

| Cottons | Max. load 8 kg* |
|---|---|
| **Cupboard Dry plus, Cupboard Dry** | |
| Use for | - Single and multi-layered cotton items.<br>- Towelling, T-shirts, underwear, jersey bed linen, baby clothes.<br>- Workwear, jackets, cotton blankets, aprons, tea towels, bed linen, towels, table linen. |
| Note | Do not use overdry jersey fabrics (e.g. T-shirts, underwear, baby clothes) because they can shrink. |
| **Hand iron, Machine iron** | |
| Use for | - Cotton and linen fabrics.<br>- Table linen, bed linen, starched laundry. |
| Tip | To prevent laundry from drying out, it should be rolled up until you are ready for ironing. |
| **Cottons PRO** | **Maximum 8 kg*** |
| Items | Cotton items such as those described under *Cottons Cupboard Dry* with normal residual moisture. |
| Note | Items are dried to a *Cupboard Dry* drying level only in this programme. |

# Programme overview

| **ECO** | **Maximum 8 kg*** |
|---|---|
| Use for | Cotton items such as those described under *Cottons Cupboard Dry* with normal residual moisture. |
| Note | - In the *ECO* programme, the *Cupboard Dry* degree of dryness is achieved.<br>- The *ECO* programme is the most energy-efficient for drying cotton items with normal residual moisture levels. |
| Note for test institutes | The *ECO* programme is the test programme in accordance with Regulations (EU) 2023/2533 and (EU) 2023/2534 for the energy label measured in accordance with EN 61121. This programme is used to evaluate compliance with the EU Ecodesign legislation. |
| **Express** | **Max. load 4 kg*** |
| Use for | Hardy items for the *Cottons* programme with the *Cupboard Dry* drying level. |
| Note | This programme is shorter compared to the *Cottons* programme. |
| **Minimum iron** | **Max. load 4 kg*** |
| **Cupboard Dry plus, Cupboard Dry, Hand iron** | |
| Use for | - Minimum iron fabrics made of synthetic, cotton or mixed fibre.<br>- Workwear, overalls, pullovers, dresses, trousers, table linen, tights. |
| **Woollens** | **Max. load 2 kg*** |
| Use for | Woollen garments and fabric containing wool blends, e.g. pullovers, cardigans, tights. |
| Note | - Wool and wool blend items are only fluffed up; they are not dried completely.<br>- Remove garments as soon as the programme has finished and leave to finish drying at room temperature. |

| Timed drying warm air | Max. load 8 kg* |
|---|---|
| Use for | - Voluminous items e.g. jackets, pillows and padded items.<br>- Fabrics made up of multiple layers, e.g. heavy cotton table cloths.<br>- Individual items of laundry, e.g. towels, swimwear, tea towels. |
| Note | - Used for airing multi-layered fabrics or large items that dry unevenly due to their make-up.<br>- Used for drying a few individual garments.<br>- Do not select the longest drying time to start with. Check the items as you are drying them to find the optimum time. |

## ☆ Special programmes

| Towelling | Max. load 8 kg* |
|---|---|
| Use for | Large quantities of single-layered and multi-layered towelling items. These include, for example, towels, bath robes, face flannels, flannel bed linen. |
| Note | Items are dried to a *Cupboard Dry plus* level only in this programme. |
| **Shirts** | **Max. load 2 kg*** |
| **Cupboard Dry, Hand iron plus** | |
| Use for | Shirts and blouses. |
| **Delicates** | **Max. load 4 kg*** |
| **Cupboard Dry plus, Cupboard Dry, Hand iron plus** | |
| Use for | - Delicate synthetic, cotton or mixed fibre fabrics.<br>- Lightweight pullovers, dresses, trousers, overalls, table cloths, shirts and blouses.<br>- Lingerie and appliquéd fabrics. |
| Note | Less creasing occurs in this programme. |
| Tip | Reducing the load will reduce creasing even further. |

# Programme overview

| | |
|---|---|
| **Gentle smoothing** | **Max. load 1 kg*** |
| **Cupboard Dry, Hand iron plus** | |
| Use for | - Cotton and linen fabrics.<br>- Minimum iron items made of cotton, synthetics or mixed fibres, e.g. trousers, jackets, shirts. |
| Note | - Smooths out creasing caused during the spin cycle in the washing machine.<br>- Items are not dried completely. Remove garments as soon as the programme has finished and leave to finish drying at room temperature.<br>- Also suitable for dry laundry that is smoothed for a fixed time interval. |
| **Denim** | **Max. load 3.5 kg*** |
| **Cupboard Dry, Hand iron plus** | |
| Use for | Denim garments, e.g. jeans, jackets, skirts, shirts. |
| **Silks** | **Max. load 1 kg*** |
| Use for | Silk garments which are suitable for tumble drying, e.g. blouses and shirts |
| Note | - Programme for reduced creasing.<br>- Items are not dried completely in this programme.<br>- Remove the garments as soon as the programme has finished. |
| **Automatic plus** | **Max. load 5 kg*** |
| **Cupboard Dry plus, Cupboard Dry, Hand iron plus** | |
| Use for | Mixed loads of garments suitable for the *Cottons* and *Minimum iron* programmes. |
| **Microfibre** | **Max. load 7 kg*** |
| **Cupboard Dry plus, Cupboard Dry** | |
| Use for | Microfibre mops and cleaning cloths. |
| **Timed drying - Cool air** | **Max. load 8 kg*** |
| Use for | Any item that only needs airing. |

| **Basket programme** | **Basket load 3.5 kg** |
|---|---|
| Fabric type/ Items | - Always follow the operating instructions for the tumble dryer basket.<br>- Use this programme to dry or air items which are suitable for drying in a tumble dryer but which are not suitable for drying using mechanical action. |
| Note | - This programme may only be used with the Miele dryer basket (optional accessory).<br>- The drum is not rotated in this programme.<br>- A satisfactory drying result cannot be achieved without the dryer basket.<br>- Always follow the operating instructions for the tumble dryer basket. |
| **Cottons** | **Maximum 8 kg*** |
| Use for | Cotton items such as those described under *Cottons Cupboard Dry* with normal residual moisture. |
| Note | - In this programme, the *Cupboard Dry* degree of dryness is achieved.<br>- The *Cottons* programme is the most energy-efficient for drying cotton items with normal residual moisture levels. |
| Note for test institutes | For countries (non-EU) in which this regulation is still valid:<br>Test programme in accordance with Regulation 392/2012/EU, measured in accordance with EN 61121. |

## Programme packages

You can select various programmes packages.
The programmes selected from the programme packages are displayed under ☆ *Special programmes*.

**Sport**

# Programme overview

| **Sportswear** | **Max. load 3 kg*** |
|---|---|
| Use for | Sportswear that is suitable for drying in a tumble dryer. |
| Note | Items are dried to a *Cupboard Dry* level only in this programme. |
| **Outerwear** | **Max. load 2.5 kg*** |
| **Cupboard Dry, Hand iron plus** | |
| Use for | Outerwear which is suitable for tumble drying. |
| **Proofing** | **Max. load 2.5 kg*** |
| Textiles | Microfibre fabrics, skiwear, outdoor wear, fine, close-weave cotton garments (poplin), and table linen which are suitable for drying in a tumble dryer. |
| Note | - This programme includes an additional proofing fixing phase.<br>- Only use proofing agents that are stated by the manufacturer as being “suitable for use on membrane textiles”. These agents contain fluorochemical compounds.<br>- Do not dry items which have been treated with proofing agents containing paraffin. This substance is a fire risk.<br>- Items are dried to a *Cupboard Dry* level only in this programme. |

## Home textiles

| **Down bedding** | **Max. load 2 kg*** |
|---|---|
| Use for | Bedding suitable for tumble drying (duvets or pillows filled with down or feathers). |
| Note | Items are dried to a *Cupboard Dry* level only in this programme. |
| Tip | Feathers have a tendency of developing a strong odour when they are warm. Allow bedding to air outside the tumble dryer after tumble drying. |
| **Synthetic bedding** | **Max. load 2 kg*** |
| Use for | Bedding suitable for tumble drying (duvets or pillows with a synthetic filling). |
| Note | Items are dried to a *Cupboard Dry* level only in this programme. |
| **Large items** | **Max. load 4 kg*** |
| **Cupboard Dry plus, Cupboard Dry, Hand iron, Machine iron** | |
| Use for | Robust, larger items for the *Cottons* programme. These include, for example, blankets, multi-layered covers, large voluminous items. |

### Hygiene

In the hygiene programmes, items will be dried with a temperature that is constant over an extended period (longer temperature holding time). This kills off micro-organisms such as germs or dust mites and reduces allergens in the laundry.
If a hygiene programme is cancelled early, micro-organisms will not be killed.
Do not cancel this programme.

| **Cottons hygiene** | **Max. load 4 kg*** |
|---|---|
| Use for | Cotton or linen items that come into direct contact with the skin. These include, for example, underwear, baby clothes, hand towels, bath towels, bathrobes, spa towels and flannels. |
| Note | Items are dried to a *Cupboard Dry* level only in this programme. |
| **Minimum iron hygiene** | **Maximum 4 kg*** |
| Use for | - Minimum iron fabrics made of synthetic, cotton or mixed fibre.<br>- Workwear, overalls, pullovers, dresses, trousers, table linen, tights. |
| Note | Items are dried to a *Cupboard Dry plus* level only in this programme. |
| **Timed drying warm air, hygiene** | **Max. load 4 kg*** |
| Use for | - Voluminous items e.g. jackets, pillows and padded items.<br>- Heavy, multi-layered cottons, e.g. table cloths or blankets. |
| Note | - Used for airing multi-layered fabrics or large items that dry unevenly due to their make-up.<br>- Used for drying a few individual garments.<br>- Do not select the longest drying time to start with. Check the items as you are drying them to find the optimum time. |

## Payment systems

Opening the door or cancelling the programme after it has started may cause a loss of credit (depending on how the tumble dryer was set up*).

* Either during the commissioning process or subsequently, a Miele service technician can reset the payment system so that programming changes can be made.

## Changing a programme once it has started

You cannot change to another programme once a programme has started (this prevents unintentional alterations). You will need to cancel the current programme before you can select a new one.

⚠ Risk of fire due to incorrect use and operation.
The laundry can burn and destroy the tumble dryer and the surroundings.
See the section on "Warning and safety" for further information.

Programme selection not possible appears if the programme selector has been moved. The text disappears when the programme selector is set to the original programme.

## Cancelling a programme

- Touch the *Start/Stop* sensor control.

A message will appear in the display asking if you wish to cancel the programme.

- Touch the Yes sensor control.

**Reselecting a cancelled programme**

- Open and close the door.
- Select and start a new programme.

## Adding laundry

- Open the door.

⚠ Risk of burns by touching hot laundry in the drum.
You could burn yourself.
Let the laundry cool down and remove it carefully.

- Add items.
- Close the door.
- Start the programme.

## Interruption to the power supply

If the power supply is interrupted because the tumble dryer has been switched off with the button ⏻:

- Switch the tumble dryer on.
- Touch the *Start/Stop* sensor control.

If the power supply is interrupted by a power cut:

- When power is restored, confirm with OK.
- Touch the *Start/Stop* sensor control.

## Time remaining

Altering the programme sequence can cause adjustments in the h min time remaining display.

## Inserting a fragrance flacon

Fragrance flacons (optional accessories) can be used to give your laundry a pleasant scent.

⚠ Risk of fire and damage to the health if fragrance flacons are used incorrectly.

The leaked fragrance can damage your health if it comes into contact with your body. Leaked fragrance can cause fire.

Before using a fragrance flacon, please read “Using a fragrance flacon (optional accessory)” under the “Warning and safety instructions”

Only hold the fragrance flacon as illustrated. Do not hold it at an angle or tip it as the fragrance will leak out of it.

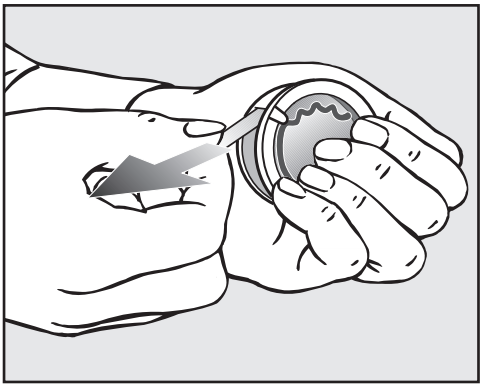

- Hold the fragrance flacon securely so that you do not open it by mistake.
- Pull off the protective seal.
- Open the door of the tumble dryer.

The fragrance flacon is inserted in the upper fluff filter. The socket is next to the recessed grip.

If you are not using a fragrance flacon, the cover to the unused socket must remain closed to prevent the build-up of fluff.

Push the tab on the cover to the bottom (see arrow).

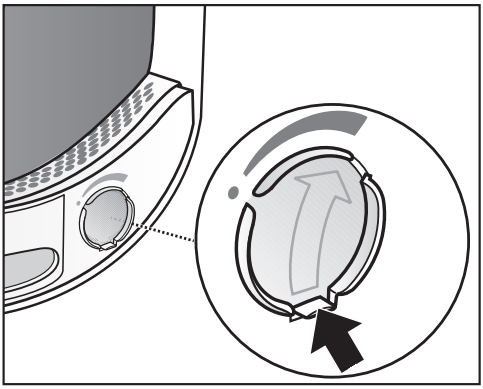

- Open the cover using the tab until the tab is right at the top.

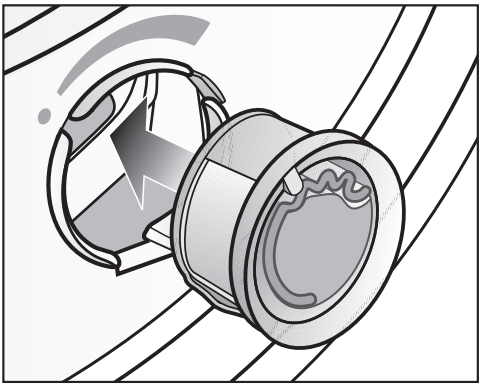

■ Insert the fragrance flacon as far it will go into the socket.

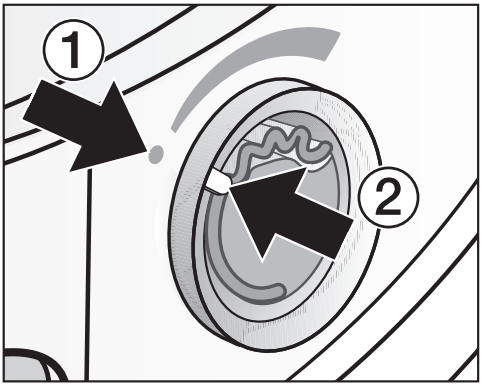


The markers ① and ② must line up with one another.

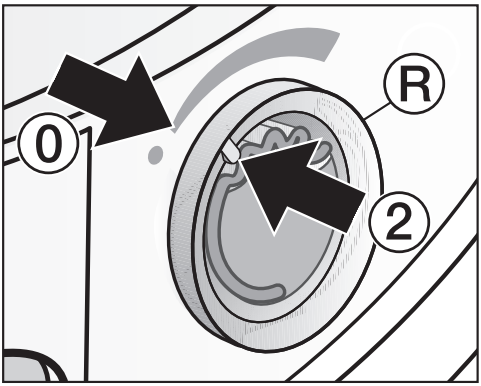


■ Turn the outer ring Ⓡ clockwise a little.

The fragrance flacon may slip out.
Turn the outer ring in such a way that the markers ② and ⓪ line up.

## Opening the fragrance flacon

Before drying, you can select the intensity of the fragrance.

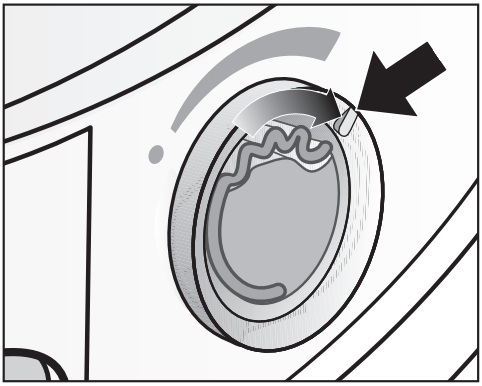

- Turn the outer ring clockwise: the further you open the fragrance flacon, the more intense the fragrance.

Damp laundry and longer drying durations with sufficient heat transfer are needed for the fragrance to be released into the laundry effectively. The fragrance will also be noticeable in the ambient air during the process. The *Timed drying cold air* programme will not generally apply fragrance.

## Closing the fragrance flacon

After drying, the fragrance flacon should be closed to prevent the fragrance from escaping needlessly.

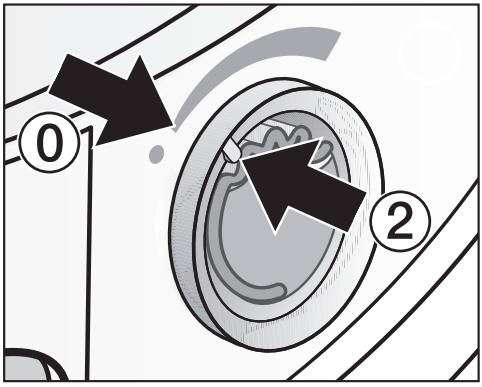


- Turn the outer ring anti-clockwise until the marker ② is in position ⓪.

If you wish to dry without the fragrance occasionally: remove the fragrance flacon and store it in its original packaging.

Replace the fragrance flacon with a new one when the intensity of the fragrance is no longer sufficient.

## Removing/replacing the fragrance flacon

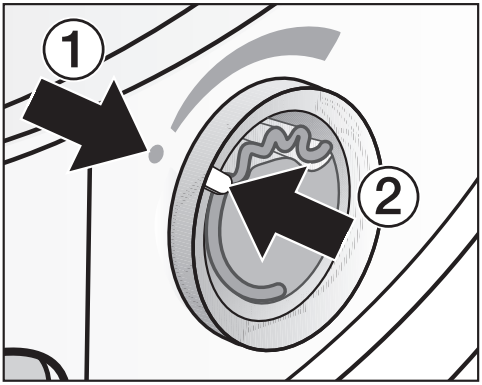


■ Turn the outer ring anti-clockwise until the markers ① and ② line up.

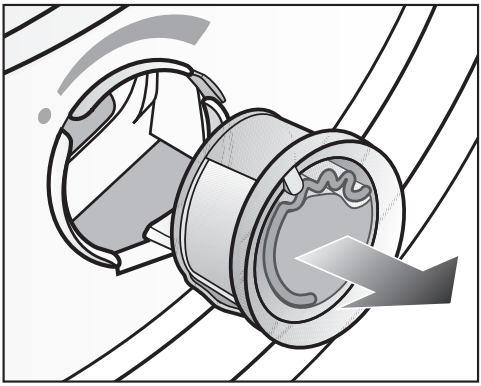

■ Replace the fragrance flacon with a new one.

When not in use, you can store the fragrance flacon in its original packaging.

Fragrance flacons are available to order from Miele or online.

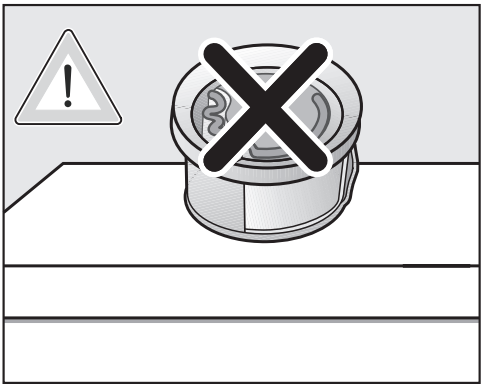

The fragrance can leak out of the flacon. Do not lay the fragrance flacon down.

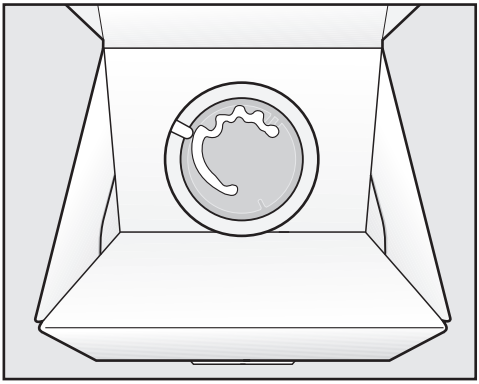

- If you are keeping the fragrance flacon in its original packaging, do not store the packaging upright on its edge or upside down. Otherwise, the fragrance will leak out.
- Always store in a cool, dry place away from direct sunlight.
- When purchasing new fragrance flacons, only remove the protective seal just before use.

## When to clean

This tumble dryer is equipped with a multi-stage filter system, which consists of a fluff filter (1.) and a filter in the plinth (2.).
This filter system collects all fluff generated during the drying process.

Failure to clean the filter regularly could increase drying times.

⚠ Fire hazard due to irregular maintenance.
Too many fluff deposits in the filter system and tumble dryer will result in a risk of fire.
Check the filter system and air supply area on a regular basis. Clean the filter if you find any fluff deposits.

⚠ Damage caused by a missing or damaged filter system.
Too many fluff deposits in the filter system and tumble dryer will result in a risk of appliance malfunctions and a risk of fire.
Never use the tumble dryer without the filter system. Always replace a damaged filter system immediately.

### 1. When to clean the fluff filter

The fluff filters are located in the drum loading area.

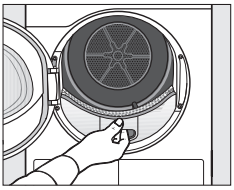

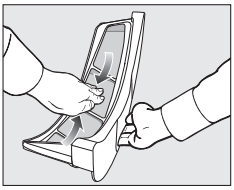

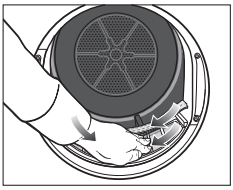

Clean the filters after every programme and always clean them when the following prompt appears in the display: Clean the fluff filter and rinse the plinth filter..

- To delete the message: touch the OK sensor control.

### 2. When to clean the filter in the plinth

The filter in the plinth is behind the fluff filter flap on the bottom left.

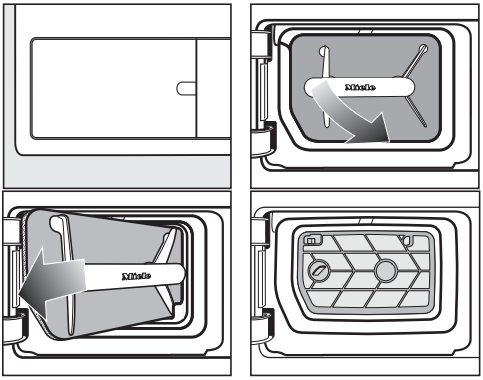


With normal use

Clean the filter when this prompt appears in the display: Clean the fluff filter and rinse the plinth filter..

With continuous use

Clean once a day and also when the prompt appears in the display.

The surface of the filter in the filter insert is visible after removing the fluff filter. This filter surface also has to be cleaned.

- To delete the message: touch the OK sensor control.

⚠ Damage caused by insufficient cleaning or by operation with a worn, damaged filter in the plinth.

There is insufficient flow of air and heat in the heat exchanger due to clogging. This requires a visit from the Service department.

This can be avoided by following the advice in these operating instructions.

**3. When to clean the grille in the bottom right/heat exchanger for heat dissipation**

Clean when Open bottom right grille, clean heat exchanger appears in the display.

The bottom right grille can be removed. This covers the heat exchanger for heat dissipation.

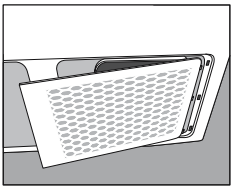

- Keep the room where the tumble dryer is located free from dust and fluff. Doing so will mean that you will rarely have to clean the grille.
- See “Bottom right grille/heat exchanger”.
- Also check and clean the filter in the plinth and the surfaces of the fluff filters.
- To delete the message: touch the OK sensor control.

## Cleaning the fluff filters

This tumble dryer has 2 fluff filters in the loading area. The upper and lower fluff filters trap fluff produced during the drying process.

Environmental impact due to fluff which has been disposed of incorrectly.

To prevent microplastics from spreading into the waste water system, fluff must not be drained away with the water.

Dispose of the fluff collected by the fluff filters with your household waste.

### Removing the fragrance flacon

The intensity of the fragrance will be diminished if the fluff filters and the plinth filter are not cleaned.

- Remove the fragrance flacon as described in “Removing/replacing the fragrance flacon” under “Fragrance flacons”.

### Removing visible fluff

Remove any fluff after every drying cycle.

**Tip:** You can also use a vacuum cleaner so that you can remove the fluff without touching it.

- Open the door.

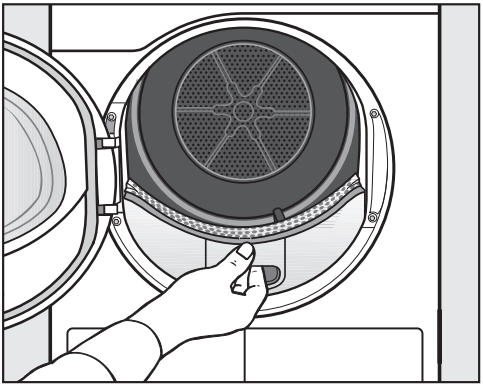

- Pull the upper fluff filter forwards to remove it.

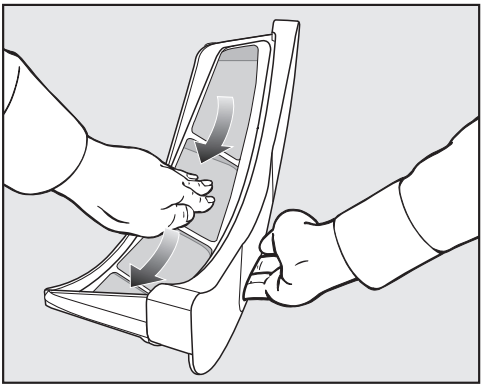

- Remove the fluff (see arrows).

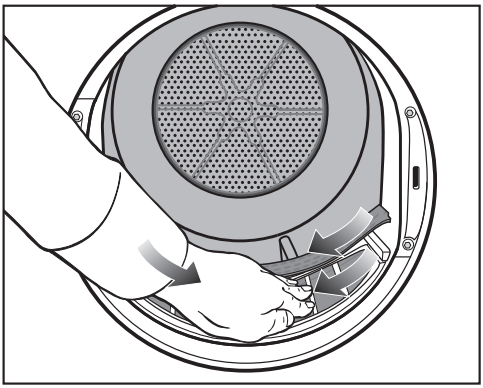

- Remove the fluff (see arrows) from the filter surface of all the filters and the perforated laundry deflector.
- Push the upper fluff filter back into position until it clicks.
- Close the door.

### Cleaning the fluff filters and air flow openings thoroughly

If the drying duration has become longer or the surface of the filters is visibly compacted with fluff, you should carry out the following cleaning procedure.

Cleaning the fluff filters while dry

- Pull the upper fluff filter forwards to remove it.

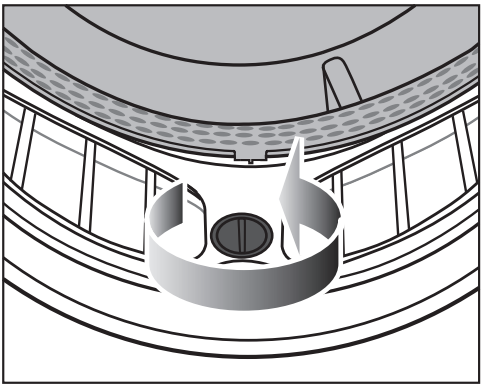

- Turn the yellow dial until it clearly engages.

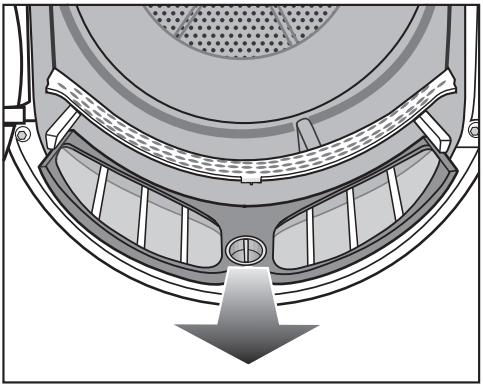

- Pull the fluff filter forwards to remove it.

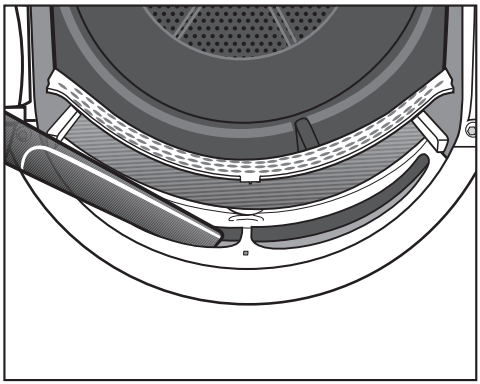

- Use a vacuum cleaner with a long crevice nozzle attached to remove any visible fluff from the upper air flow openings.

Cleaning the fluff filters with water

- Rinse the filter surfaces through under warm running water.
- Wipe the smooth plastic surfaces of both fluff filters with a damp cloth to clean them.

Problems during drying due to wet fluff filters.
The dryer may exhibit malfunctions.
Shake the fluff filters thoroughly and then dry them carefully.

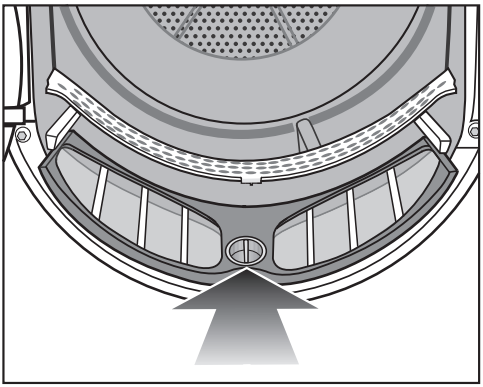

- Push the lower fluff filter in completely and lock it with the yellow rotary control.

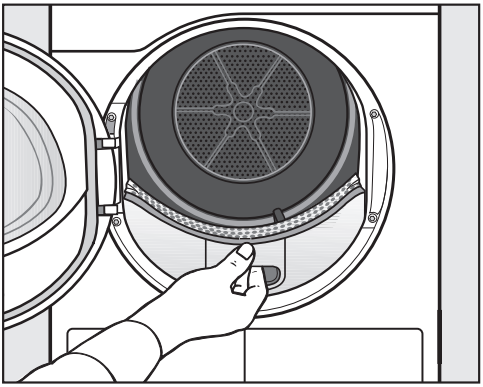

- Push the upper fluff filter all the way in.
- Close the door.

## Cleaning the plinth filter

The plinth filter collects finer fluff, hair and detergent residues that have got through the surfaces of the other fluff filters.

Environmental impact due to fluff which has been disposed of incorrectly.

To prevent microplastics from spreading into the waste water system, fluff must not be drained away with the water.

To collect the cleaning water, clean the plinth filter in a bowl or bucket.

### Removing the plinth filter

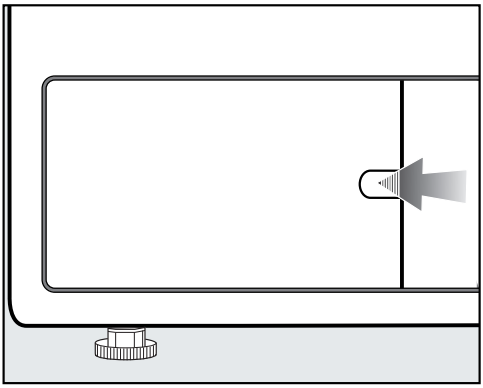

- Reach behind the catch with your finger.
- Open the flap on the plinth filter.

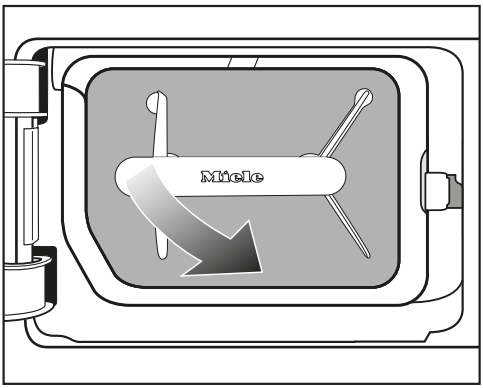


❶ Use the handle to pull out the plinth filter forwards at an angle and to the right.

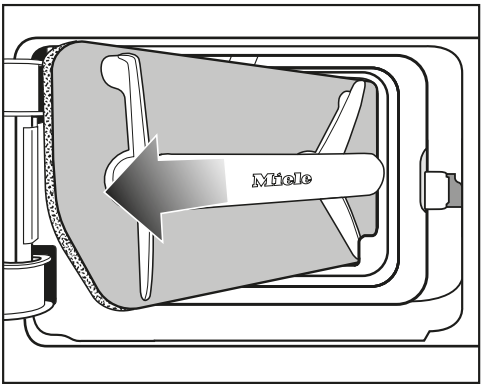


❷ Pull the plinth filter out at an angle.

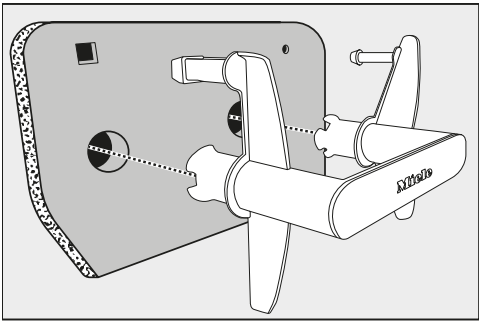


■ Pull the handle out of the plinth filter.

**Cleaning the plinth filter**

■ Clean the plinth filter carefully and thoroughly under running water.

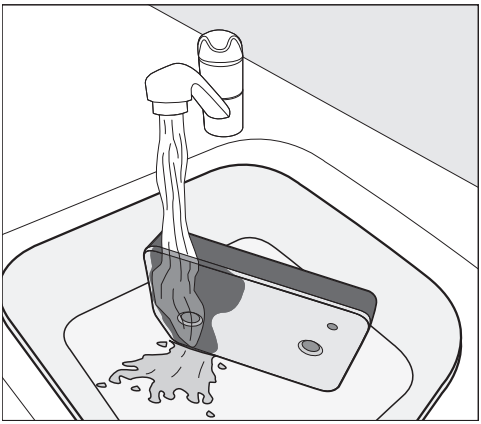

**Tip:** To speed up the removal of residue from the surface, run a water jet vertically over the front of the plinth filter.

■ Squeeze the plinth filter very carefully several times as you rinse it.

**Tip:** Place the plinth filter so that it lies flat in the bowl or bucket.

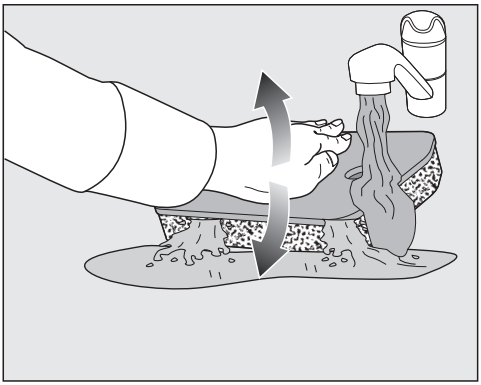

■ To efficiently loosen underlying residue, gently press down on the plinth filter with the back of your hand.

■ Rinse the entire plinth filter thoroughly until all visible residue has been removed.

■ Carefully squeeze the plinth filter with the back of your hand until all of the water has been removed.

**Tip:** To soak up water, place the damp plinth filter between 2 hand towels. On an even surface, gently press down on the plinth filter with the back of your hand. This will dry the plinth filter more quickly.

The plinth filter must not be fitted dripping wet.
Otherwise, this could cause a fault.
Carefully squeeze the water out of the plinth filter.

If a drying programme is interrupted with a fault message after the clean plinth filter has been refitted, the plinth filter was too wet when it was refitted. Carefully squeeze the water out of the plinth filter again. Leave the plinth filter to air-dry.
If a fault occurs again despite this, it may be due to stubborn residue from washing substances. Reactivate the plinth filter in the washing machine. See “Problem solving guide – Reactivating the plinth filter”.

⚠ Damage caused by an insufficiently cleaned or damaged plinth filter.
If the plinth filter has not been properly cleaned or is damaged, the heat exchanger will be clogged. There will be an insufficient flow of air and heat in the heat exchanger. This will require a visit from the Customer Service Department.
Before and after cleaning, check the plinth filter in accordance with the description in “Replacing the plinth filter”. The plinth filter must be intact and in perfect working order after cleaning.

- Use a damp cloth to remove any fluff from the handle.

**Pouring out the cleaning water**

- To catch any particles or fluff, pour the contents of the bowl or bucket through a filter (e.g. coffee filter).
- Dispose of the filter with your household waste.

**Replacing the plinth filter**

⚠ Filter wear caused by continuous tumble dryer use.
Continuous operation and frequent cleaning can cause the plinth filter to wear out more quickly, which can clog the heat exchanger.
Replace the filter immediately if you see the following signs of wear (optional accessory).

Poor fit

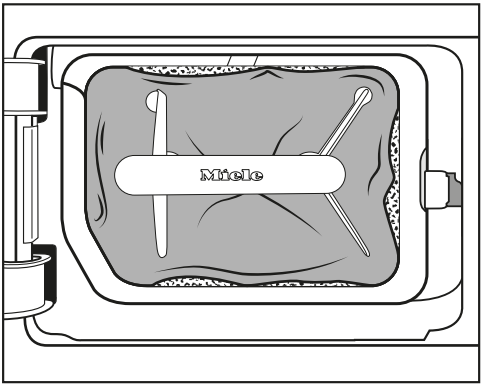


The edges of the filter do not sit properly and the filter is deformed. Fluff will blow into the heat exchanger unfiltered through edges that do not sit properly. This will cause a permanent obstruction in the heat exchanger.

Deformation

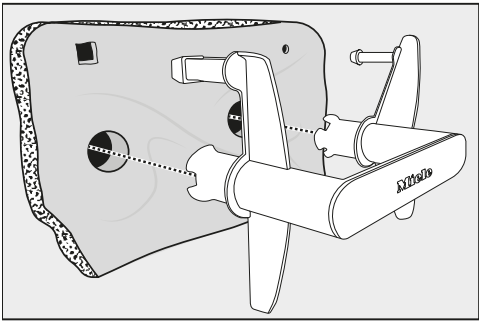


Deformations indicate that the filter has become blocked and worn by continuous use.

Cracks, tears, indentations

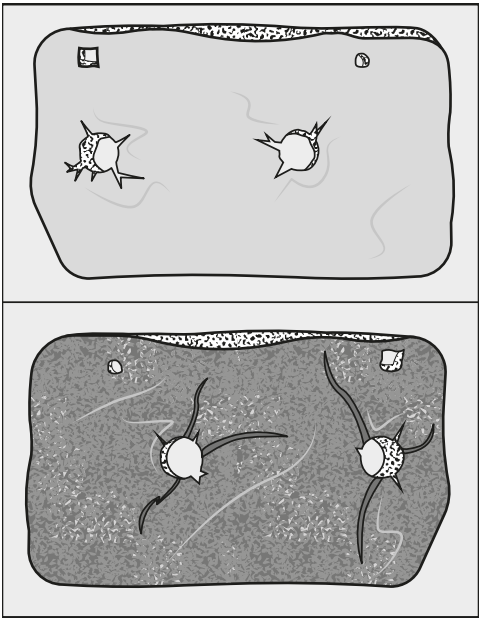

Fluff will blow into the heat exchanger through cracks and tears and will cause obstruction.

Indentations indicate that the filter has become blocked and worn by continuous use.

White residues or residues of other colours

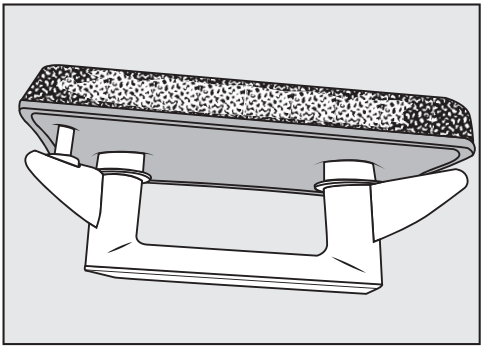

Residues arise from laundry fibres and traces of detergent components which can clog the filter. They can be found on the front and side edges of the filter. In extreme cases, they can form stubborn crust.
Residues are a sign that the filter is no longer a snug fit at the sides, even if it appears to be perfect: fluff is getting in unfiltered at the edges.

If these residues appear on the filters again soon after cleaning, the filter must be replaced.

## Cleaning the filter insert (in the plinth)

The surface of the filter in the filter insert is visible after removing the fluff filter in the plinth. This filter surface must only be cleaned if there is a visible accumulation of fluff.

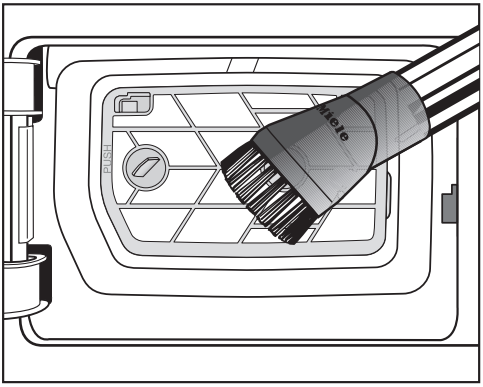


- Carefully vacuum up any visible fluff or soiling. Use a dusting brush or the narrow crevice nozzle.

If there are visible blockages or other residues after cleaning: remove the filter insert and clean it under running water. If stubborn residues are not removed, these can lead to faults over time.

**Removing the filter insert**

If the filter insert is clogged up and soiled, it must be removed and cleaned under running water.

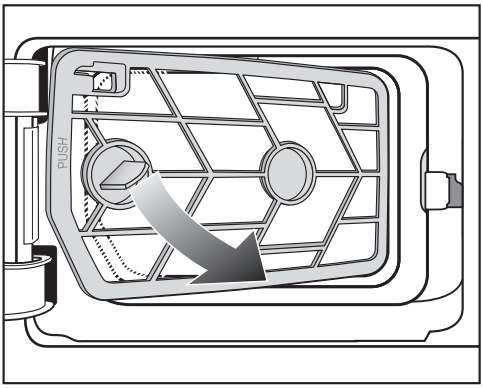


❶ Use the handle to pull out the filter insert at an angle forwards and to the right.

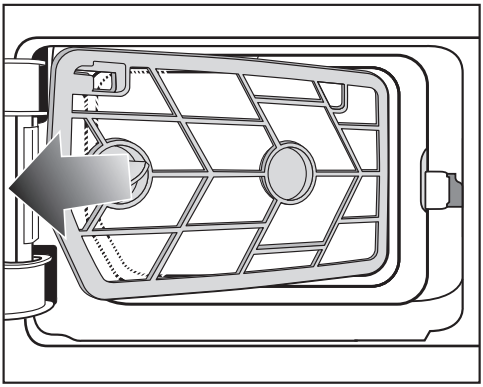

❷ Then pull the filter insert out at an angle.

- Rinse the filter surface of the insert under warm running water.

Wet filters could cause operational faults while drying.
Shake the filter insert thoroughly and then dry it carefully.

### Check the cooling fins on the heat exchanger

⚠ Danger of injury if you touch the cooling fins.
You could cut yourself.
Do not touch the cooling fins with your hands.

After removing the filter insert, visually check the cooling fins on the heat exchanger. Check for any accumulation of fluff.

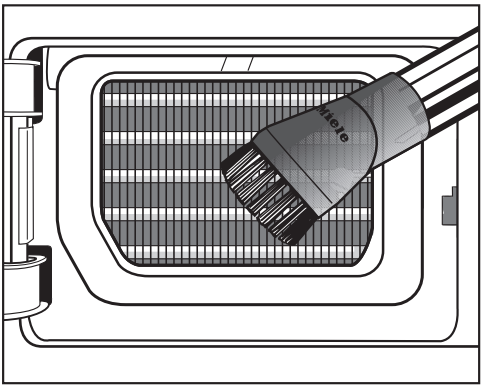


- If you notice any visible soiling, carefully vacuum it up with a vacuum cleaner. Use a dusting brush or the narrow crevice nozzle.

⚠ Risk of damage if cooling fins are cleaned incorrectly.
The cooling fins can suffer damage or distortion. This could hinder the operational performance of the tumble dryer.
Clean using a vacuum cleaner with a dusting brush attached. Only pass the vacuum cleaner dusting brush over the fins lightly, without applying any pressure.

### Refitting the filter insert (in the plinth)

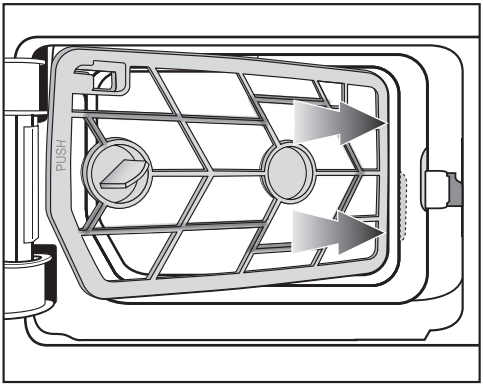


❶ Use the handle to slide the filter insert to the right at an angle behind the edge.

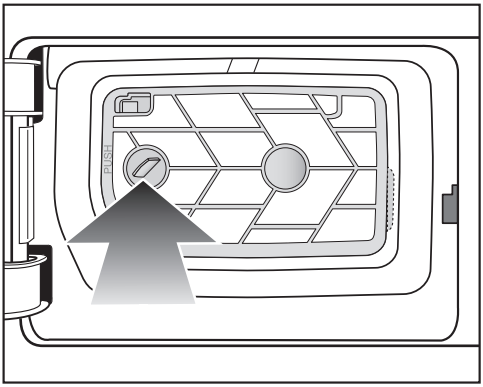


❷ Then press on the handle until the filter is secured in position on the left.

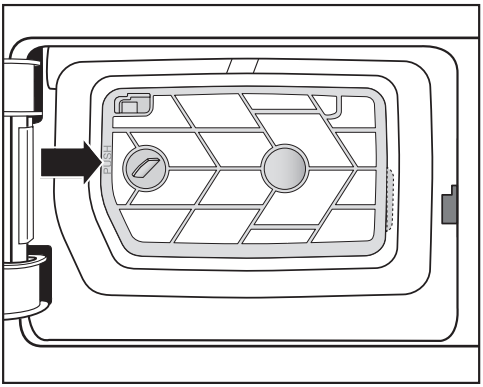


❸ Press the frame of the filter insert in at the positions marked PUSH until it audibly engages.

## Refitting the fluff filter in the plinth

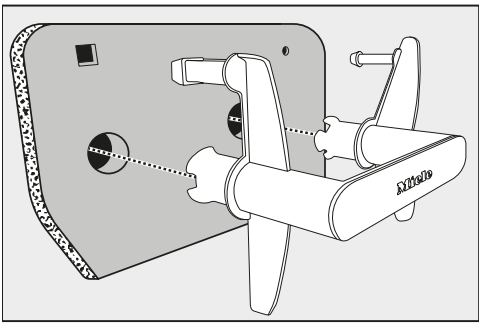


■ Fit the fluff filter back on the handle. Make sure it is the correct way round.

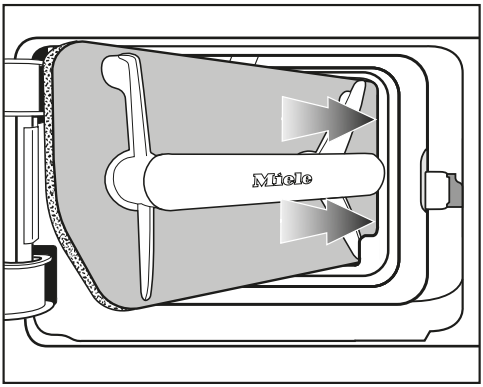


❶ Use the handle to slide the fluff filter on the right at an angle behind the edge.

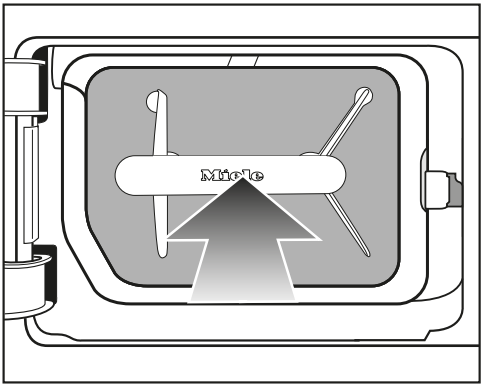


❷ Then press on the handle until the fluff filter is secured in position.

## Cleaning and closing the fluff filter flap

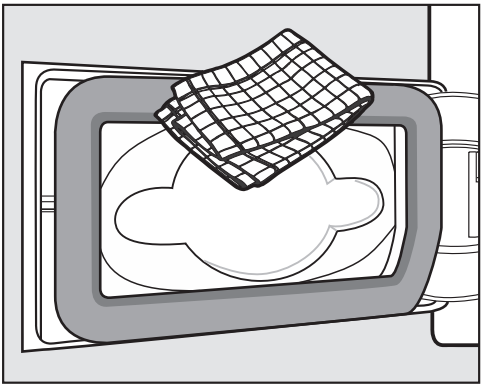

- Use a damp cloth to remove any fluff. Make sure that you do not damage the rubber seal when doing this.

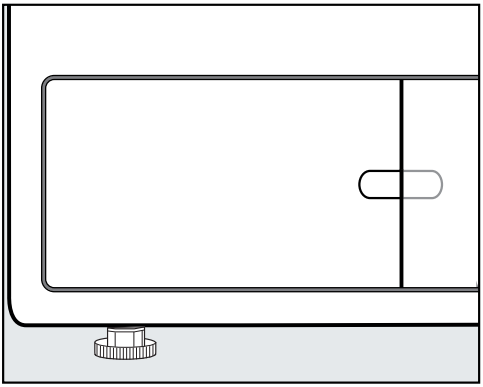

- Close the fluff filter flap.

The plinth filter must be inserted and the fluff filter flap must be closed to ensure the system is correctly sealed and that the tumble dryer will function correctly.

## Cleaning the bottom right grille/ heat exchanger

The heat exchanger's cooling fins behind the grille can become blocked with dust and dirt drawn in from the surrounding area.

### Removing the grille

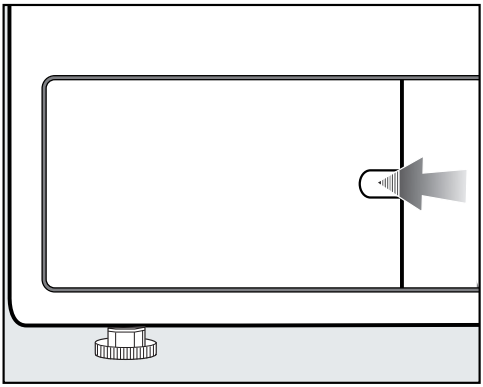

- Open the fluff filter flap.

Open the bottom right grille, e.g. using a spoon handle.

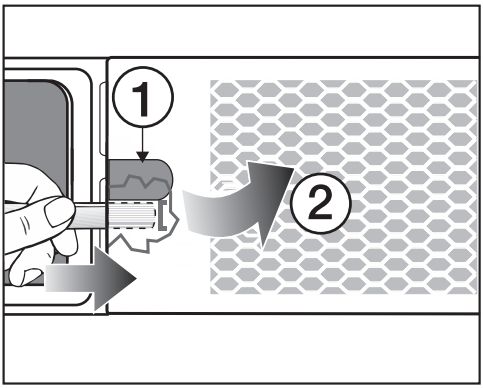

- Insert a spoon handle underneath the grille (under the recess ①).
- Press and lever the grille gently until it opens on the left-hand side ②.
- Open the grille from left to right and pull it off at an angle to the front.

### Cleaning the cooling fins

- Check whether the cooling fins are clogged.

⚠ Danger of injury caused by touching the cooling fins.
You could cut yourself.
Do not touch the cooling fins with your hands.

If there is visible soiling:

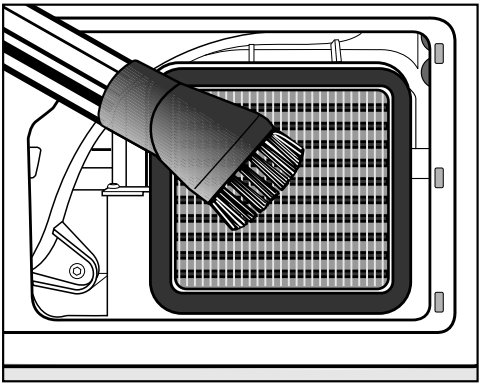

- Carefully vacuum up any visible fluff or soiling. Use a dusting brush or the narrow crevice nozzle.

⚠ Risk of damage if cooling fins are cleaned incorrectly.
The cooling fins can suffer damage or distortion. This could hinder the operational performance of the tumble dryer.
Clean using a vacuum cleaner with a dusting brush attached. Only pass the vacuum cleaner dusting brush over the fins lightly, without applying any pressure.

### Replacing the grille

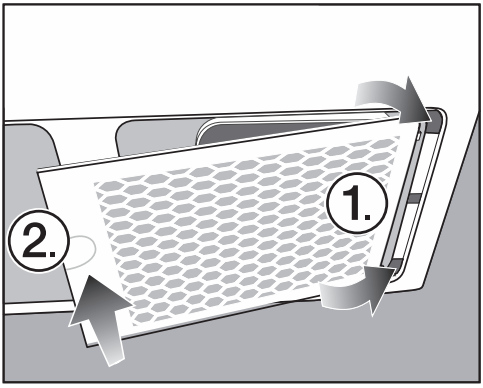


- Insert the grille on the right-hand side.
- Press the grille firmly on the left-hand side.

## Cleaning the tumble dryer

Disconnect the tumble dryer from the electrical supply.

⚠ Damage caused by the use of unsuitable care products.
Unsuitable care products could damage plastic surfaces and other parts.
Do not use any solvents, abrasive cleaners, glass cleaners or all-purpose cleaners.

⚠ Danger of electric shock caused by water.
There is a risk of electric shock if water runs over or into the tumble dryer.
Never spray the tumble dryer with water. Only ever clean the appliance with a slightly damp, soft cloth.

Cleaning recommendation: clean once or twice a year and as required.

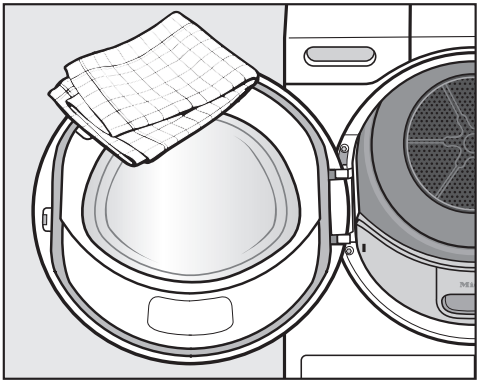

- Clean the tumble dryer and the seal on the inside of the door with a slightly damp soft cloth and a mild solution of washing-up liquid and soapy water.
- Dry all parts with a soft cloth.
- The drum and other stainless steel parts can be cleaned with a suitable stainless steel cleaner.

# Problem solving guide

Many malfunctions and faults that can occur in daily operation can be easily remedied. You can save time and money in many cases, as you do not need to call the Miele Customer Service Department.

Information to help you rectify faults yourself can be found at www.miele.com/service.

The following tables are designed to help you to find the cause of a malfunction or a fault and to resolve it.

## The display indicates the following messages or faults

| Message | Cause and remedy |
|---|---|
| Drum empty or the laundry is too dry. **lights up after a programme has been cancelled.** | This is not a fault.<br>In some programmes, if the drum has been underloaded or is empty, the programme will be cancelled. This can also happen if the items are already dry.<br>■ Open the door and check the laundry.<br>■ Add items if necessary.<br>■ Close the door to resume drying.<br>Dry individual items using the *Warm air* programme. |
| Power outage. Programme stopped | There has been a power outage.<br>■ When power is restored, confirm with OK.<br>■ Touch the *Start/Stop* sensor control. |
| Open bottom right grille, clean heat exchanger **lights up at the end of a programme.** | The heat exchanger's cooling fins behind the grille can become blocked with dust and dirt drawn in from the surrounding area and the airways can become blocked with fluff.<br>■ Clean as described in “Bottom right grille/heat exchanger” under “Cleaning and care”.<br>■ Check and clean the filters in the loading area and in the plinth.<br>■ To delete the message: touch the OK sensor control. |
| Clean the fluff filter and rinse the plinth filter. **lights up at the end of a programme.** | The tumble dryer is not working correctly or economically. Possible causes could be clogging caused by fluff or detergent residue.<br>■ Normally, all you have to do is clean the fluff filter.<br>■ Also check the plinth filter and clean it if necessary.<br>■ If you have removed the plinth filter, also check the filter insert behind it. Clean it if necessary.<br>Please see “Cleaning and care” for notes on cleaning.<br>■ To delete the message: touch the OK sensor control. |

| Message | Cause and remedy |
|---|---|
| Finish / Cooling down **lights up and the drying process is not yet finished.** | This is not a fault. The laundry is still being cooled. The programme is just about to end.<br>■ You can remove the laundry and spread it out to cool down or leave it in the tumble dryer to cool down until the end of the programme. |
| Rinse the fluff filter and the plinth filter. Check the airways. **lights up after a programme has been cancelled.** | You have attempted to dry only a few items of varying size. A smaller item has been sucked into the loading area in the door and is clogging the holes in the laundry deflector.<br>■ To delete the message: touch the OK sensor control.<br>■ Open the tumble dryer door.<br>■ Remove the item that is blocking the holes.<br>■ Always dry small, individual items together with larger items.<br>If you are able to exclude all this, an even more major problem has occurred. See below. |
| | The system has been clogged by fluff or detergent residue.<br>■ Clean all lint filters and air channels.<br>■ Check whether the fluff filters in the loading area and plinth are free from damage and in good working order.<br>■ If you have removed the plinth filter, also check the filter insert behind it. Clean it if necessary.<br>■ If you have removed the filter insert, also check the heat exchanger behind it. Clean it if necessary.<br>Please see “Cleaning and care” for notes on cleaning. Damaged, deformed or uncleanable fluff filters must be replaced.<br>■ To delete the message: touch the OK sensor control. |
| Rinse the fluff filter and the plinth filter. Check the airways. **continues to light up after a programme has been cancelled, despite thorough cleaning.** | The plinth filter looks clean after thorough cleaning. However, the programme terminates and the error message appears again. It is likely that there is still underlying residue that could not be removed.<br>■ To delete the message: Touch the OK sensor control.<br>■ Replace the plinth filter with a new one.<br>■ You can reactivate the removed, “old” plinth filter in the washing machine. Follow the instructions described in “Problem solving guide – Reactivating the plinth filter”. |

| Message | Cause and remedy |
|---|---|
| Check water drainage. **lights up after a programme has been cancelled.** | The condensate drain is faulty.<br>■ Check that the drain hose is in good working order and is not bent.<br>■ To delete the message: open and close the door while the tumble dryer is switched on. |
| Plinth filter not fitted. Please fit it. | The plinth filter has not been inserted.<br>■ Check the filter in the plinth.<br>Removing the filter during a drying programme will result in the programme being cancelled. |
| Fault F. If restart fails, call Service. **lights up after a programme has been cancelled.** | There is no obvious cause.<br>■ Note the prompt in the display.<br>■ Touch the OK sensor control.<br>If the programme terminates again with the same error message, then there is a fault. Contact Miele Service. |
| Obstruction detected. Untangle laundry and restart **lights up after a programme has been cancelled.** | The laundry is unevenly distributed or has rolled up.<br>■ Open the door and loosen the laundry. Take out some of the laundry if necessary.<br>■ Close the door.<br>■ Start a programme. |

## Unsatisfactory drying results

| Problem | Cause and remedy |
|---|---|
| **The laundry is not sufficiently dry.** | The load consisted of different types of fabric.<br>■ Finish drying using the *Timed drying warm air* programme. |
| **Large items of laundry have rolled up, causing a problem. The individual items of laundry are still damp.** | The laundry could not be disentangled in the programme you selected. Smaller items have rolled up into one.<br>■ Disentangle the laundry.<br>■ Select the *Large items* programme. |
| **Laundry or feather filled pillows smell after drying.** | The laundry was washed with insufficient detergent<br>Feathers are a natural product and this is quite normal.<br>■ Laundry: use sufficient detergent next time.<br>■ Allow feather pillows to air after tumble drying. |
| **Items made of synthetic fibres are charged with static electricity after drying.** | Synthetic fibres tend to attract static charge.<br>■ Static charge can be reduced by adding a fabric conditioner to the final rinse in the washing programme or a fabric conditioner sheet to the load when drying. |
| **There is a build-up of fluff.** | Fluff is principally the result of friction when garments are being worn and to some extent when they are being washed. Machine drying hardly causes any fluff to form and has no appreciable effect on the lifetime of the fabric.<br>Fluff is collected by the fluff filters and fine filter and can be easily removed<br>■ (see “Cleaning and care”). |

## The drying cycle duration is very long

| Problem | Cause and remedy |
|---|---|
| **The drying process goes on too long or even switches off*.** | The room where the tumble dryer is located is too warm.<br>■ Ventilate the room thoroughly. |
| | Detergent residues, hair and fine fluff can clog the filters.<br>■ Clean the fluff filters and the filter in the plinth. See “Cleaning and care” for an in-depth description.<br>■ If you have removed the plinth filter, also check the filter insert behind it. Clean it if necessary.<br>■ If you have removed the filter insert, also check the heat exchanger behind it. Clean it if necessary. |
| | The cooling fins behind the bottom right grille are soiled.<br>■ Clean as described in “Bottom right grille/airways” under “Cleaning and care”. |
| | The laundry is too damp.<br>■ Spin using a higher spin speed in the washing machine. |
| | The drum is too full.<br>■ Do not exceed the maximum load size for the drying programme selected. |
| | Metallic components, e.g. zips, have prevented the tumble dryer from registering the correct laundry moisture level.<br>■ Open any zips next time.<br>■ If the problem recurs, dry these items using the *Timed drying warm air* programme. |

* Switch the tumble dryer off; wait a short while before starting a new programme.

## General problems with the tumble dryer

| Problem | Cause and remedy |
|---|---|
| **There are humming noises.** | The compressor is operating.<br>These noises are quite normal and do not indicate a fault. |
| **The drum lighting does not come on.** | To save energy, the drum lighting goes out automatically after a set time and after the programme starts.<br>■ Switch the tumble dryer off and then on again.<br>■ To switch the drum lighting on, open the door of the tumble dryer. |
| | The drum lighting is faulty.<br>The drum lighting is designed to last a long time and should not normally need to be replaced.<br>■ If you have tried everything but the drum lighting still does not come on, contact the Miele Customer Service Department. |
| **The display is in a different language.** | A different language has been selected.<br>■ Set the language you want. The flag symbol ⚑ will guide you. |

## Reactivating the plinth filter

You can reactivate one or more soiled plinth filters in a washing machine. You will then be able to use the plinth filter again for a reasonable period of time.

- Wash the plinth filter(s) separately, not with any laundry items. Do not add any detergent.

**Tip:** Select a short wash programme with a maximum temperature of 40 °C and a maximum spin speed of 600 rpm.

- Select the *Separate rinse* programme, for example.

You can re-insert the plinth filter once the wash and spin cycles are complete. You can continue to use a reactivated plinth filter provided that it does not show any signs of wear.

You must stop using the plinth filter if it shows signs of wear or deformation.
Please see “Cleaning and care – Replacing the plinth filter” for details.

## Contact in the event of a fault

In the event of any faults which you cannot remedy yourself, please contact your Miele dealer or the Miele Customer Service Department.

You can book a Miele Customer Service Department call-out online at www.miele.com/service.

Contact information for the Miele Customer Service Department can be found at the end of this document.

Please quote the model identifier and serial number of your appliance (Fabr./SN/Nr.) when contacting the Miele Customer Service Department. This information can be found on the data plate.

Please note that telephone calls may be monitored and recorded for training purposes and that a call-out charge will be applied to service visits where the problem could have been resolved as described in this booklet.

Open the door of your tumble dryer to find the data plate:

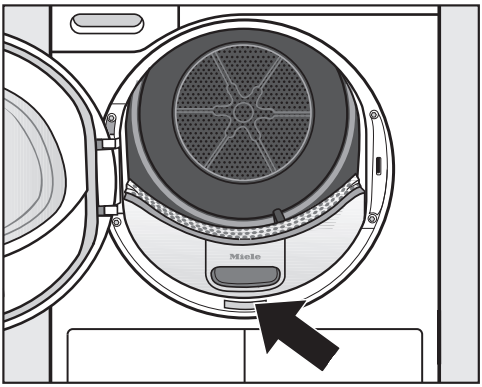


## Optional accessories

Optional accessories for this tumble dryer are available from your Miele Dealer or from the Miele Spare Parts Department.

## Maintenance

Preventive maintenance supports fault-free operation and prevents unnecessary repairs.

Miele recommends regular maintenance by Miele Customer Service.

## EPREL database

Information on energy labelling and eco-design requirements is available in the European Product Database (EPREL). You can find the product database at the following link https://eprel.ec.europa.eu/. You will be asked to enter the model identifier.

The model identifier can be found on the data plate.

## Front view

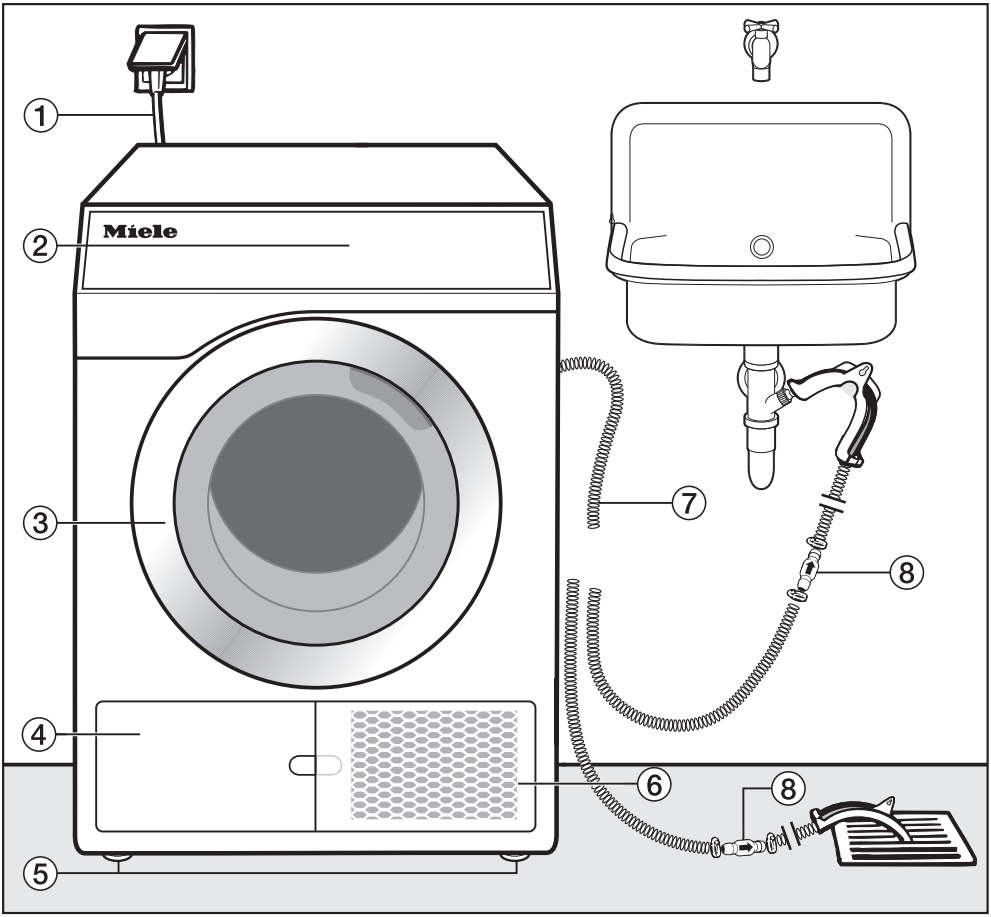


① Mains connection cable

② Control panel

③ Door

④ Fluff filter flap for the filter in the plinth

– Open only when a prompt appears in the display

⑤ 4 height-adjustable screw feet

⑥ Bottom right grille = Air cooling opening

– Open only when a prompt appears in the display

⑦ Drain hose for condensation

⑧ Non-return valve, required

## Rear view

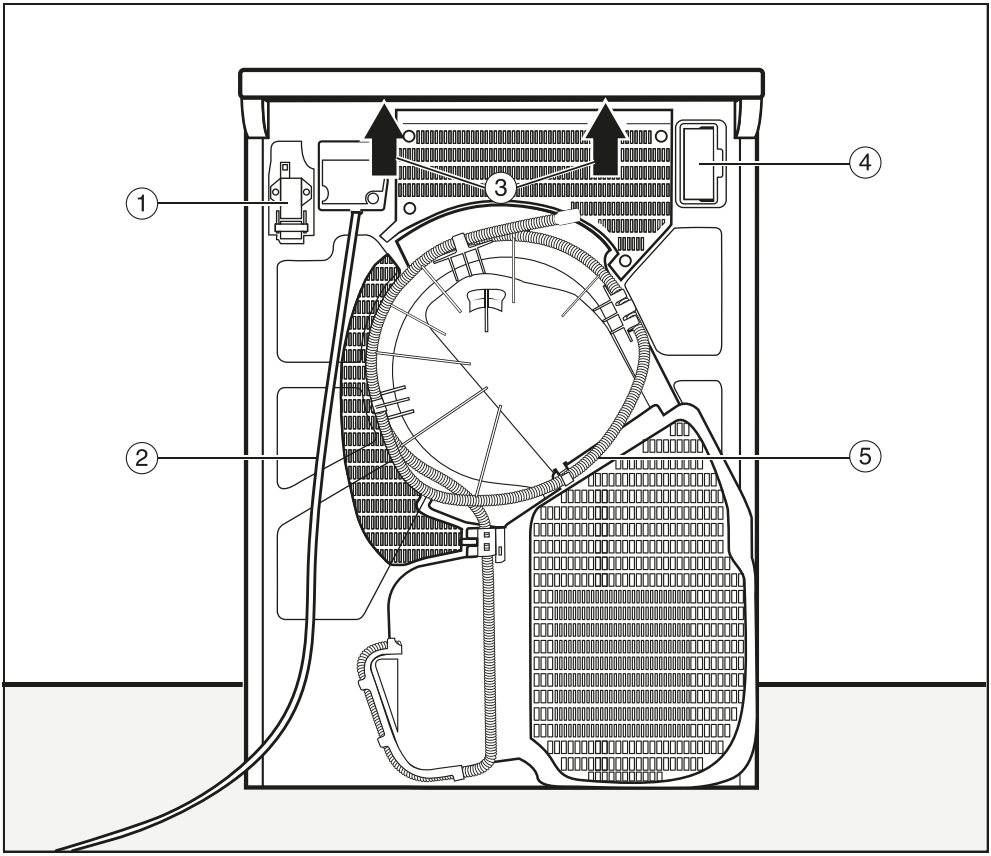


① Interface for communicating with external devices

② Mains connection cable

③ Recesses under the protruding lid for transporting the appliance

④ Module slot (for external communication module)

⑤ Drain hose for condensation

## Locations

All measurements are in mm.

The distances between the machine and the wall are recommendations to help make it easier to carry out service work. If installation space is limited, the machine can also be pushed up against the wall.

### Washer-dryer stack

⚠ Installing the washer-dryer stack on a Miele plinth is not permitted.

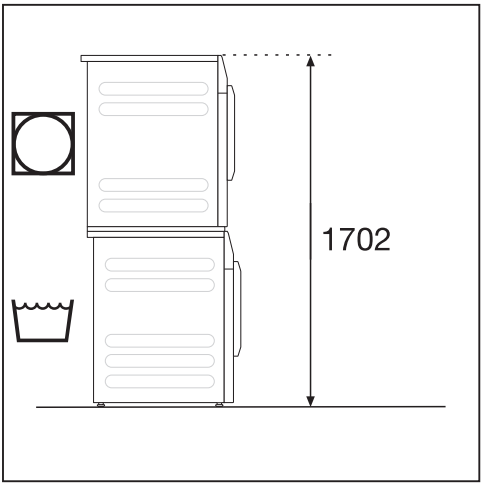


A stacking kit* (APCL 001) is required. This must be fitted by a Miele authorised technician. Secure the washing machine using the fastening bracket supplied with the machine.

* Miele accessory available to order

### Dryer stack with 2 tumble dryers

⚠ Installing the dryer stack on a Miele plinth is not permitted.

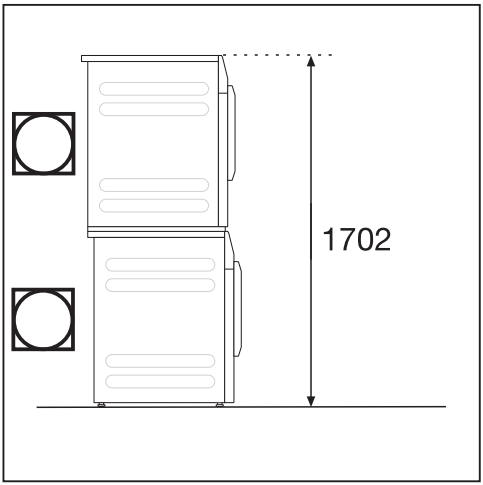


2 Miele tumble dryers can be installed as a dryer stack. A stacking kit* is needed for this purpose. This must be fitted by a Miele authorised technician.
* Miele accessory available to order

⚠ To prevent slipping or tipping, the tumble dryer at the bottom must be secured with 2 tensioning strips (optional accessories).

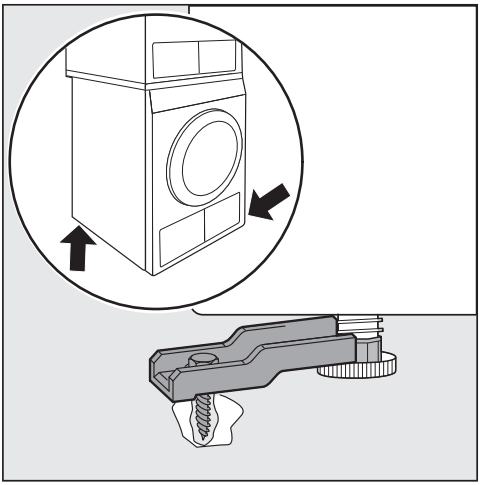

- Secure 2 feet to the tumble dryer diagonally at the front and rear or only at the rear.

Only the “Little Giants” models listed in the table may be installed as dryer stacks in the prescribed combinations.
Other combinations are not permitted.

| Dryer stack with 2 tumble dryers | | |
|---|---|---|
| Dryer model at the bottom | Dryer model at the top | Stacking kit* |
| PDR 3xx/5xx/ 9xx HP P | PDR 3xx/5xx/ 9xx HP P | APCL 001 |
| PDR 3xx/5xx/ 9xx HP P | PDR 3xx/5xx/ 9xx ROP EL | APCL 001 |
| PDR 3xx/5xx/ 9xx ROP EL | PDR 3xx/5xx/ 9xx HP P | APCL 001 |
| Secure the bottom dryer with 2 tensioning strips | | |

* Miele accessory available to order

**Steel plinth**

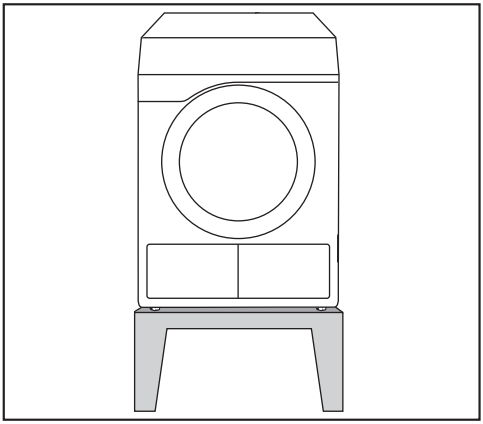

Steel plinth* (open or closed bases)

**Side view**

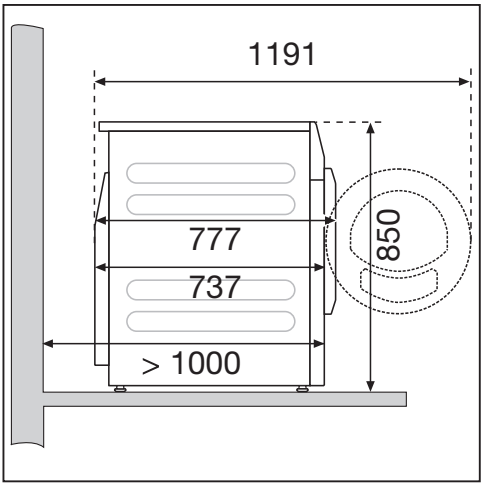

### View from above

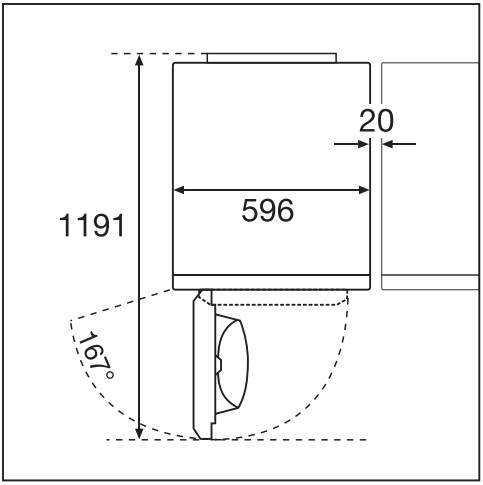


## Transporting the tumble dryer to its installation site

⚠ Damage caused by incorrect transportation of the tumble dryer.
If the tumble dryer tips over, there is a danger of injury to people and damage to property.
Ensure that the tumble dryer is stable during transportation.

### Transporting the tumble dryer

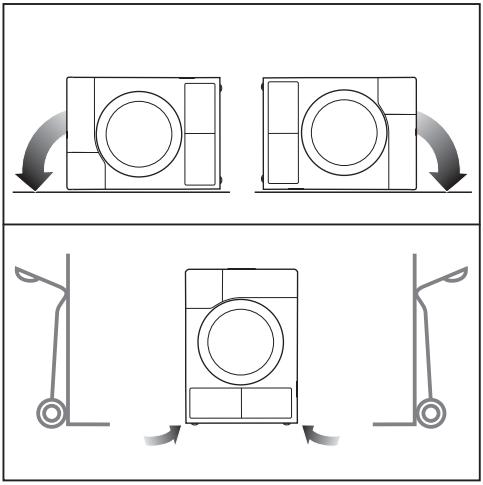

- If the tumble dryer is being transported on its side, it must be tipped onto its left or right side.
- If the tumble dryer is being transported upright, always transport it on a sack truck with its left or right side resting on the truck.

### Transporting the tumble dryer to its installation site

⚠ Danger of injury due to unsecure lid.
The fixings at the back of the lid could break as a result of external forces. There is a danger of the lid being pulled off when carrying the machine.
Before carrying the machine, check that the lid is secure where it protrudes at the back of the machine.

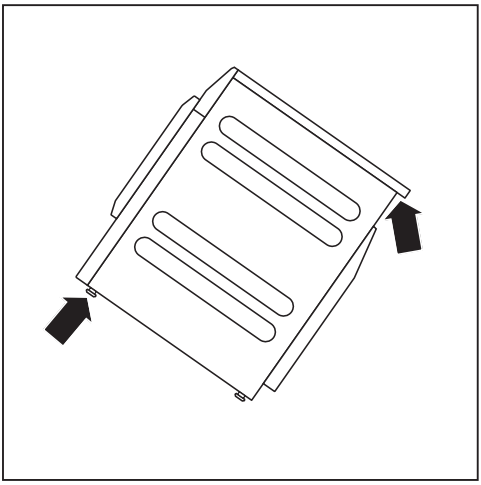

■ Carry the tumble dryer by the front feet and by the lid where it protrudes at the back of the appliance.

## Installation

Ensure that no closeable door, sliding door, or an oppositely hinged door is installed that would hinder the door of the tumble dryer being opened in any way.

⚠ Risk of fire and explosion due to damage to the tumble dryer.
The refrigerant is flammable and explosive.
Do not make any alterations to the tumble dryer. Take measures to protect the tumble dryer against damage.

If the tumble dryer is damaged, proceed as follows:

- Avoid naked flames or anything which creates a spark.
- Disconnect the tumble dryer from the electrical supply.
- Air the room where the tumble dryer is located.
- Contact the Miele Customer Service Department.

### Downtime after installation

⚠ Damage caused by switching the appliance on too soon.
This can damage the heat pump.
After setting up the tumble dryer, wait for at least one hour before switching it on.

### Levelling the tumble dryer

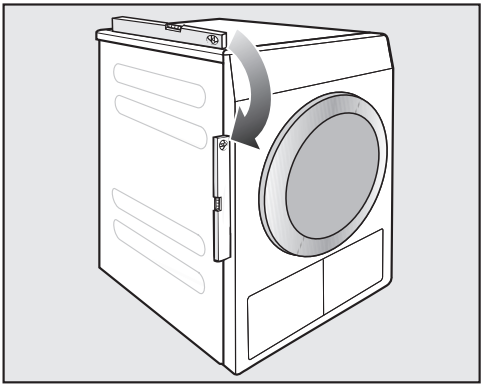

The appliance must stand perfectly level on all four feet to ensure safe and proper operation.

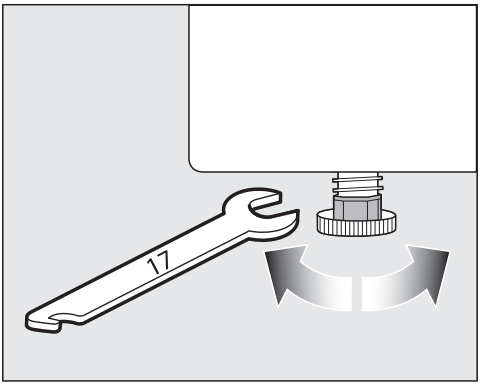


The screw feet can be adjusted to compensate for unevenness in the floor.

This tumble dryer is not suitable for building under.

Never block the ventilation slots on the tumble dryer. Do not block the gap between the bottom of the tumble dryer and the floor with plinth facings, deep pile carpet etc. This would hinder a sufficient flow of air to the tumble dryer.

**Room ventilation**

- Air drawn in for use in the drying process will be warm when it is expelled back into the room. It is therefore very important to ensure the room is adequately ventilated, particularly if the dryer is located in a small room. An openable window is not classed as adequate ventilation.
- Make sure the room temperature is not too high. If there are other heat producing appliances in the room in which the dryer is located, make sure the room is well ventilated and switch the other appliances off, if possible.

Otherwise running times and energy consumption could be increased.

The heat pump that is essential to the operation of this tumble dryer generates a great deal of heat inside its casing. There must be a reliable means of dissipating this heat.

Otherwise loads could take longer to dry or the tumble dryer might sustain damage in the long term.

Permanent room ventilation during every drying programme and the gap between the bottom of the tumble dryer and the floor are mandatory requirements at all times.

**External control equipment**

An optional accessory unit has to be purchased to set up a connection with external systems:

- XCI box communication module (e.g for peak load control units or payment systems)
- XCI-AD communication adapter (for payment systems only)

Payment systems

This tumble dryer can be fitted with a payment system (optional Miele accessory). In this case, a Miele Service technician must programme the relevant settings in the tumble dryer's electronics and connect the payment system.

Coins/tokens must be removed from the coin box regularly. Otherwise, the payment system will become blocked.

## Hose for external drainage of condensed water

The condensed water is pumped away through the drain hose which is located at the back of the dryer.

### Laying the drain hose

⚠ Damage to the drain hose due to incorrect handling.
The drain hose can suffer damage and leak.
Do not pull on the drain hose and do not stretch it or allow it to become kinked.

**Tip:** Use the bow-shaped guide to prevent the drain hose from becoming kinked.

Drain hose length: 1400 mm
Delivery head: 1000 mm

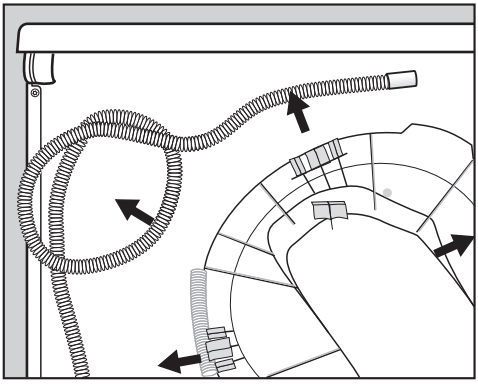

■ Pull the drain hose out of the clips.

### Drainage options

**Tip:** Follow the warnings regarding leaking or returning water if you select one of the following connection options.

- Directed into a floor gully
- Connected directly to a sink drain outlet
- Connection to a drainage system already in use by another appliance, e.g. a dishwasher or washing machine

⚠ Water damage.
Should the end of the hose come loose, overflowing water can cause damage.
Secure the drain hose carefully (e.g. by tying it) to make sure it cannot slip.

⚠ Damage caused by condensation back-flow.
Water could flow back into the tumble dryer or be drawn into it. The tumble dryer will sustain damage and water will leak out.
The non-return valve should be used if the end of the hose is immersed in water, or if other water connections are installed.

### Drainage accessories, included

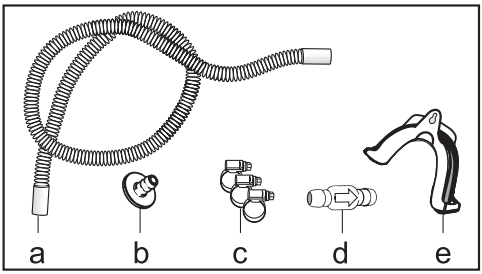


a. Hose extension
b. Adapter
c. Hose clip
d. Non-return valve
e. Hose holder

**Example: Connected directly to a sink drain outlet**

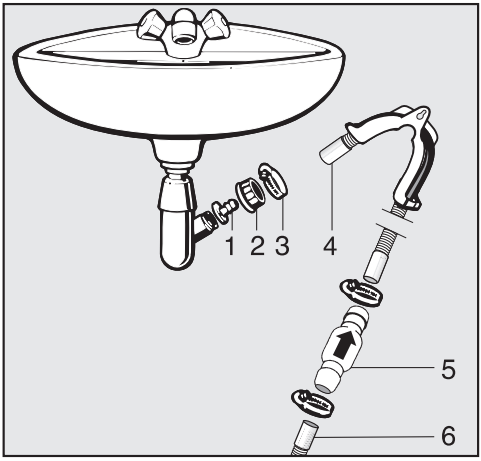


1. Adapter
2. Nut
3. Hose clip
4. Hose extension
5. Non-return valve and hose clips
6. Tumble dryer drain hose

- Install adapter **1** to the sink drain outlet using nut **2**.
  The nut is usually fitted with a washer which must be removed.
- Attach the end of the hose **4** to adapter **1**.
- Use a screwdriver to tighten hose clip **3** up close to the nut.
- Insert the non-return valve **5** into the tumble dryer's drain hose **6**.

Install the non-return valve **5** so that the arrow points in the direction of flow (towards the sink).

- Secure the non-return valve using hose clips.

## Electrical connection

This description applies to tumble dryers both with and without a mains plug.

The following applies to tumble dryers with a mains plug:

- This tumble dryer is supplied with a mains cable and plug ready for connection.
- The electrical socket must be easily accessible so that the tumble dryer can be disconnected from the electricity supply.

⚠ Damage caused by incorrect supply voltage.
The data plate indicates the nominal power consumption and the appropriate fuse rating.
Compare the specifications on the data plate with those of the mains electricity supply and make sure that they match.

The electrical system must comply with local and national safety regulations (BS 7671 in the UK). We recommend the use of a suitable RCD ⎓.

The tumble dryer may only be connected to a permanent electrical system that conforms to the national and local codes and regulations.

The tumble dryer should never be connected by an extension cable, e.g. power strips, to avoid the risk of fire.

If the machine is hard wired, a dual circuit breaker must be provided on-site. When switched off there must be an all-pole contact gap of at least 3 mm in the isolator switch (including miniature circuit breaker, switch, fuses and relays according to IEC/EN 60947). This connection process must be performed by a qualified electrician.

The plug connector or isolator switch should be easily accessible at all times.

⚠ Risk of electric shock from mains voltage.

If the tumble dryer is disconnected from the mains, protective measures must be taken to ensure that the point of disconnection cannot accidentally be switched on again.

Make sure the isolator is lockable or the point of disconnection is monitored at all times.

New connections, modifications to the system, or servicing of the earthing conductor, including determining the correct fuse amperage, must be carried out by a qualified electrician, as they are familiar with the pertinent regulations and the specific requirements of the electric utility company.

The tumble dryer must not be connected to devices such as timers which would switch it off automatically.

**Single phase AC 230 V – country variant 230V 25A**

This device is intended for connection to a power supply system where the maximum value of external phase neutral loop impedance Zmax of 0.38 Ohms at the point of distributor supply connection is not exceeded.

The user has to ensure that this device is connected only to a power supply system which fulfils the requirement above. If in doubt, please ask your electrical distributor for actual impedance value.

# Consumption data

| Programmes | Load size[2] kg | Running time h:min | Energy kWh | Final moisture content after drying % |
|---|---|---|---|---|
| **ECO**[1] | 8.0 | 1:38 | 1.91 | 0 |
| | 4.0 | 1:02 | 1.11 | 0 |
| **Cottons** | 8.0 | 1:56 | 2.20 | - 4 |
| **Extra dry** | 4.0 | 1:13 | 1.35 | - 4 |
| **Cottons** | 8.0 | 1:20 | 1.45 | 12 |
| **Hand iron** | 4.0 | 0:49 | 0.85 | 12 |
| **Minimum iron Cupboard Dry plus** | 4.0 | 0:49 | 0.80 | 0 |
| **Minimum iron Cupboard Dry** | 4.0 | 0:43 | 0.70 | 2 |
| **Minimum iron Hand iron** | 4.0 | 0:33 | 0.55 | 8 |
| **Delicates Cupboard Dry** | 4.0 | 0:45 | 0.75 | 0 |

[1] ECO is the test programme in accordance with Regulations (EU) 2023/2533 and (EU) 2023/2534 for the energy label measured in accordance with EN 61121. The sound power level at full load for the ECO test programme is 64 dB(A) re 1 pW.

[2] The load refers to the weight of the dry laundry.

The values quoted for other programmes without the ECO programme are guide values calculated using EN 61121.

**Consumption data can vary from the nominal values given above depending on load size, types of textiles, residual moisture levels after spinning, additional programme parameters selected and fluctuations in the electricity supply, or when water hardness levels differ from specified values.**

| | |
|---|---|
| Height | 850 mm |
| Width | 596 mm |
| Width (only for appliances with a stainless steel lid) | 605 mm |
| Depth | 777 mm |
| Depth with door open | 1191 mm |
| Weight | 72 kg |
| Drum volume | 130 l |
| Load size | 8 kg (weight of dry laundry) |
| Hose length | 1400 mm |
| Length of mains connection cable | 2000 mm |
| Supply voltage | See data plate on back of appliance |
| Rated load | See data plate on back of appliance |
| Fuse rating | See data plate on back of appliance |
| Test certifications awarded | See data plate on back of appliance |
| LEDs | Class 1 |
| Designation of refrigerant | See data plate on back of appliance |
| Refrigerant quantity | See data plate on back of appliance |
| Product safety standard | EN 50570, EN 60335 |
| A-rated emission sound pressure level $L_{pA}$ in accordance with EN ISO 11204/11203 | < 70 dB re 20 µPa |
| Frequency band | 2.4000 GHz – 2.4835 GHz |
| Maximum transmission power | < 100 mW |

## EU Conformity declaration

Miele hereby declares that this heat-pump tumble dryer complies with Directive 2014/53/EU.

The complete text of the EU declaration of conformity is available from one of the following internet addresses:

- Products, Download from www.miele.ie
- For service, information, operating instructions etc: go to https://miele.ie.manuals and enter the name of the product or the serial number

## UK Conformity declaration

Miele hereby declares that this heat-pump tumble dryer complies with UK Radio Equipment Regulations 2017, as amended.

The complete text of the UK declaration of conformity is available from one of the following internet addresses:

- Products, Download from www.miele.co.uk
- For service, information, operating instructions etc: go to https://miele.co.uk/manuals and enter the name of the product or the serial number

This **Statement of Compliance** confirms this Miele product fully complies with the **Product Security and Telecommunications Infrastructure (Security Requirements for Relevant Connectable Products) Regulations 2023.**

1) Household Appliance – *Professional Tumble Dryer GT10, GT11, GT14, GT15*
2) Manufactured by: Miele & Cie KG,
   Carl Miele Street 29, 33332 Gutersloh Germany
   Imported by and contact point: Miele Company Ltd, Fairacres, Marcham Road, Abingdon, Oxon, OX14 ITW Great Britain
3) The defined support period at the time of first supply is 10 years
4) To report vulnerabilities and cybersecurity issues please contact: psirt@miele.com
5) Signature
   Name: **Paul Wright**
   Company Position: **Head of Technical Management**
   Date of signature: **19th March 2024**
   Place of signature: **Abingdon, Oxfordshire**

## Opening Supervisor level

The settings menu in the Supervisor level is locked against unauthorised access. The menu can be unlocked with a code.

### Access via code

The supervisor level is accessed using a code.

Factory default: the code is **000**.

### Change code

You can alter the supervisor level access code to protect the tumble dryer from unauthorised access.

Carefully enter a new code.
Please inform Miele Service if you have forgotten your new code. Miele Service will have to reset the code.
Make a note of your new code and store it in a safe place.

### Demo programme

In showrooms, a demo programme can be started with a simulation.

The programme does not start. The operational sequence is simply a simulation.

**Tip:** The demo programme will only be available if a drying programme lasting more than 1 hour has not been carried out. After this, the demo programme will not be available.

- Factory default: Off
- On

### Opening the supervisor level

■ Touch the sensor control.

The symbol appears in the display if you turn the programme selector to a programme.

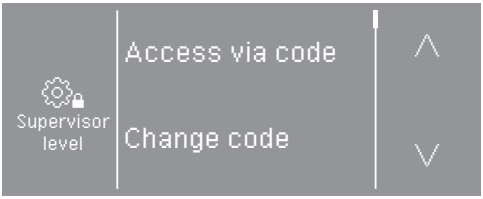


The following options are available for selection: Access via code, Change code, Demo programme.

■ Select Access via code.

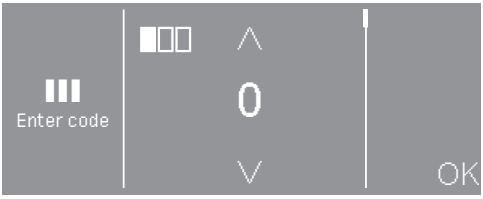


■ Enter the individual numbers and confirm each selection with OK.

The supervisor level settings are opened.

■ Select the desired setting.

### Exiting the supervisor level

■ Touch the sensor control or switch off the tumble dryer.

## Language

The display can be set to appear in one of several different languages. To select the language you want, go to the *Languages* sub-menu.

You can change the language as follows:

- Permanently using the supervisor level (= “Supervisor language”).
- For the duration of the current programme only using the sensor control. The supervisor language is displayed again at the end of the programme.

## Brightness

The brightness of the display can be set in intervals of ten from 10 % to 100 %.

Factory default: 70 %

## Clock display

After selecting the clock format, you can set the time of day.

**Clock format**

- Factory default: 24-hour display
- 12-hour display
- Clock off

**Set**

- The time can be set.

## Finish tone volume

The volume can be changed for the audible signal that sounds at the end of the programme.

It can be set to one of 7 different levels or switched off altogether.

Factory default: Off

## Keypad tone volume

An audible signal can also be activated that sounds when the sensor controls are pressed; the volume of this signal can be adjusted.

It can be set to one of 7 different levels or switched off altogether.

Factory default: normal

## Welcome tone volume

The volume of the switch-on signal tone can be changed.

It can be set to one of 7 different levels or switched off altogether.

Factory default: Off

## Fault alarm

The audible signal that indicates an error can be switched off.

- Factory default: On
- Off

## Memory

The tumble dryer saves the settings that were last selected for a drying programme (drying stage and/or extra option, or the duration for some programmes).

- Factory default: Off
- On

## Anti-crease

At the end of the programme, the drum will continue to rotate at intervals if the laundry is not removed immediately.

Changing this setting leads to increased energy consumption.

The setting (⏲) can be switched off or a time between 1 and 12 hours can be selected.

Factory default: Off

## Further cooling

Before the end of the programme, the temperature of the dried laundry is monitored and the cooling phase at the end of the programme is extended if necessary.

Changing this setting leads to increased energy consumption.

- Factory default: Off
- On

## Cooling down temperature

The laundry will be cooled down automatically before the end of the programme. The automatic cooling-down phase which takes place before the end of a programme can be set at a cooler level for all programmes. This means that the cooling phase is extended.

Changing this setting leads to increased energy consumption.

The setting can be changed from 40 °C–55 °C.

Factory default: 55 °C

## “Display” switch-off status

To save energy, the display goes out and the *Start/Stop* button flashes slowly.

Changing this setting leads to increased energy consumption.

- On after 10 min, not in current programme (factory default)
  The display will remain on during the programme sequence but will go out 10 minutes after the end of the programme.
- On after 10 min
  The display will go out after 10 minutes.

## Delay start

The type of time input for the delay start function can be changed or switched off.

- Off
  The delay start function is not available for selection.
- End of programme (factory default)
  With the delay start function, you specify at what time the programme should end.
- Beginning of programme
  With the delay start function, you specify at what time the programme should begin.
- Time until start
  With the delay start function, you specify after how many hours a programme should begin.

SmartStart

The function of the ⏲ sensor control changes when the *SmartGrid* setting is activated and the *Time until start* option is selected in the *Delay start* setting. The period of time in which the drying programme will start automatically is then shown in the display: *SmartStart*

The programme is started via an external signal.

The time period can be defined up to 24 hours. During this period, the tumble dryer waits for the external signal. If no signal is sent during the defined period, the tumble dryer starts the drying programme once the defined period of time has elapsed.

## Programme name

When selecting a standard programme, the name of the selected drying is shown in the display.

- Factory default: on
  When a programme is selected, the programme name is displayed for a few seconds before the display shows the main menu.
- Off
  The main menu is displayed immediately.

## Visibility parameters

Various parameters are offered/displayed when a programme is selected. You can decide which parameters should not be displayed. These parameters can then not be edited during programme selection.

- Residual moisture
- Duration
- Gentle tumble

## Drying levels Cottons

## Drying levels Minimum iron

## Drying levels Automatic plus

You can alter the drying levels for the *Cottons, Minimum iron and Automatic plus* programmes.

Changing this setting leads to increased energy consumption.

It can be set to one of 7 different levels.

Factory default: normal

## Drying levels Machine iron

The *Machine iron* drying level in the *Cottons* programme can be individually adapted.

Changing this setting leads to increased energy consumption.

You can change the residual moisture in this programme to one of 11 levels from 16 % (more dry) to 26 % (more moist).

Factory default: 20 %

## Clean the airways

The tumble dryer's electronics calculate the degree at which fluff or detergent residue in the fluff filters and air ducts are impairing performance. A message to check the contamination appears. You can decide at what level of fluff this reminder should be emitted.

You can adjust this reminder: Clean out airways

- Off
  The reminder does not appear. However, if there is a very severe blockage in the ducting, the programme will be cancelled and the reminder will appear in the display regardless of this option.
- Heavy
  The reminder only appears when there is a heavy build-up of fluff.

- Factory default: normal
- Sensitive
  The reminder appears when there is only a small build-up of fluff.

## Programme packages

The tumble dryer's additional scope of programmes can be configured. The programmes are listed under “Programme chart”.

You can select various programmes packages.
The programmes selected from the programme packages are displayed under ☆ *Special programmes*.

- **Sport**
  - Sportswear
  - Outerwear
  - Proofing
- **Home textiles**
  - Down bedding
  - Synthetic bedding
- **Hygiene**
  - Cottons hygiene
  - Minimum iron hygiene
  - Timed drying warm air, hygiene

## COM mod. selection

This tumble dryer is equipped with an integrated WiFi module. However, the dryer can also be equipped with an external module.

- Off
- Internal module (factory default)
  The internal WiFi module is used.
- External module
  An XKM module or RS232 module is inserted into the module slot.

## Field of application

- Commercial environment
  A connection to Miele MOVE is established.
- Private environment
  A connection to the Miele app is established.

## Availability of Miele digital products

The ability of Miele digital products depends on the availability of the services in your country.

The different services are not available in all countries.

For information about availability, please visit www.miele.com.

## WiFi / LAN

Control the networking of your tumble dryer.

Connecting your tumble dryer to your WiFi network will increase energy consumption, even when the tumble dryer is switched off.

- Setup
  This message only appears if the tumble dryer has not yet been connected to a WiFi network.
- Deactivate (visible when the network is activated)
  The network remains set up; the WiFi function is switched off.

- Activate (visible when the network is deactivated)
  The WiFi function is reactivated.
- Connection status (visible when the network is activated)
  The following values are displayed:
  – The quality of WiFi reception
  – The network name
  – The IP address
- Reset (visible when set up)
  Resets the WiFi login (network) to immediately re-establish a new connection.
- Reset (visible if already set up)

  The network is no longer set up. A new connection has to be established in order to use the network again.
  – The WiFi is switched off
  – The WiFi connection will be reset to the factory default setting

**WiFi setup**

There are 2 possible connection methods.

WPS

■ Activate the WPS function on your router within 2 minutes.

**Tip:** If the connection has not been set up when the timeout has finished counting down, repeat the process.

Soft AP

■ Activate the function with the Miele app on your smart device within 10 minutes.

**Tip:** The app will guide you through the remaining steps.

## Network time

The date and time can be synchronised over the network.

- Off

  The date and time are not synchronised over the network.
- As master

  The machines are in a network but are not connected to the Internet. A machine is declared as the master and sends data to the *slave* devices.
- As slave

  The machines are in a network and are connected to the Internet. All machines are configured as *slaves*. Data is synchronised over the Internet.

## Remote

Operating data relating to the tumble dryer (e.g. fault messages or notifications) is communicated externally.

- Factory default: On
- Off

## Remote update

The RemoteUpdate function is used for updating the software in your tumble dryer.

Factory default: on

If you do not install a RemoteUpdate, you can continue to use your tumble dryer in the usual way. However, Miele recommends installing remote updates.

Activation

The RemoteUpdate menu option is only displayed and can only be selected if you have added your tumble dryer to your WiFi network.

Miele's RemoteUpdate function can only be used if the tumble dryer is connected to a WiFi network and you have an account in the Miele Professional app. The tumble dryer must be registered in the app.

See the Miele Professional app for terms and conditions of use.

Some software updates can only be carried out by Miele Service.

Running a RemoteUpdate

If a RemoteUpdate is available for your washing machine, it will be displayed automatically when the Operator level is open.

You can choose to start the RemoteUpdate immediately or wait until later. If you select "Start later", the prompt to run the RemoteUpdate will be displayed again the next time you switch on your washing machine.

The RemoteUpdate can take a few minutes.

Please note the following information about the RemoteUpdate function:

- You will only receive a message when a RemoteUpdate is available.
- Once a RemoteUpdate has been installed, it cannot be undone.
- Do not switch off the tumble dryer during a RemoteUpdate. Otherwise, the RemoteUpdate will be aborted and will not be installed.

## SmartGrid

The SmartGrid setting is only visible if a network has been set up and activated. You can use this function to integrate your tumble dryer into building energy management systems.

## Legal information

Open source licences

You can view information here.

### Copyrights and licences for operator and control software

Miele uses their own and third party software which is not subject to any so-called open source licence for the operation and control of the machine. This software/these software components are protected by copyright. The copyright powers of Miele and third parties have to be respected.

Furthermore, this machine contains software components which are distributed under open source licence conditions. Please refer to the menu item Settings | Machine parameters | Legal information | Open source licences in the machine for the Open Source components contained therein, together with the corresponding copyright notices, copies of the licencing conditions valid at the time, and any further information. The liability and warranty provisions of the Open Source licence terms and conditions as stated therein apply only in relation to the respective rights holders.

## Payment system

The XCI-AD or XCI box accessory unit is required to connect a payment system.

### Setting for payment systems

If you wish to change the settings after the commissioning process, please contact Miele Service.

You would like to connect a payment system.

- No payment system

  The following settings are skipped and initial commissioning can be completed.
- Programme operation

  The machine is operated using a coin box. The user purchases a programme.
- Timed operation

  The tumble dryer is coin-operated using a time meter. The user purchases a time-controlled programme.
- Timed operation with pulse counter

  For payment systems where the usage time is increased each time a coin is inserted.
- COM module

  The machine is operated by a central control unit

**External programme lock**

The control unit has an option to block programmes. Programmes are blocked by an external system via the COM interface. A programme can be blocked based on the available time or the available account balance, or generally.

- Factory default: Off
- On

**Time / impulse**

Can only be set for timed operation with pulse counter.

To be able to operate the tumble dryer with conventional payment systems where multiple coins can be inserted, you can adjust how much time is purchased each time a coin is inserted.

A time of between 5 and 60 minutes can be set in increments.

Factory default: 30 minutes

**Feedback signal to pay system**

Setting the feedback signal for the coin box.

- Factory default: Off
- End of programme

  The feedback signal is sent at the end of the programme.
- Release of the start button

  The feedback signal is sent when the start button is released.
- Start and end of programme

  The feedback signal is sent at the start and end of the programme.
- Programme running

  The feedback signal is sent constantly between the start and end of the programme.
- Process air temperature

  The feedback signal is sent dependent on the temperature if the temperature of the process air is equal to or higher than the set temperature.

**Payment system lock**

To avoid tampering, a programme lock can be set up in programme operation. If the lock is applied, the programme is interrupted and payment credit is lost as soon as the door is opened.

The time for the lock to be applied can be adjusted to enable laundry to be added.

- Factory default: off
- As soon as the programme starts

- 1–5 minutes after the start of the programme

**Delete paid signal**

The “Paid” signal in coin box mode can be applied until the end of the programme or discarded if the programme is not started after 5 minutes.

- Factory default: Off
- On

**Debounce time**

In coin mode, the debounce time for the minimum payment signal that must be applied can be adjusted.

- Factory setting: Short

  For coin boxes where the falling coin generates the paid pulse.
- Long

  For central control units on a 230 V basis.

**Payment system overriding time**

Setting the transition signal for the coin box. Security time margin to prevent the coin box being tampered with.

The transition time can be adjusted in 15-minute increments between 30–240 minutes or switched off.

If the programme does not end within the transition period, the setting in the coin box is reset. The programme is cancelled.

Factory default: 180 minutes

**Duration Cool air**

The running time can be adjusted.

A time of between 10 and 120 minutes can be set in 5-minute increments.

Factory default: 120 minutes

**Duration Warm air**

The running time can be adjusted.

A time of between 20 and 120 minutes can be set in 5-minute increments.

Factory default: 60 minutes

**FOC programmes**

In coin mode, you can decide whether the *Timed drying cool air* programme can be used for free.

- Factory default: Off
- On

**United Kingdom**
Miele Co. Ltd., Fairacres, Marcham Road
Abingdon, Oxon, OX14 1TW
Professional Sales, Tel: 0845 365 6608
E-mail: professional@miele.co.uk
Internet: www.miele-professional.co.uk

**Australia**
Miele Australia Pty. Ltd.
ACN 005 635 398, ABN 96 005 635 398
Level 4, 141 Camberwell Road, Hawthorn East, VIC 3123
Tel: 1300 731 411
Internet: www.miele-professional.com.au
E-mail: professional.sales@miele.com.au

**China Mainland**
Miele Electrical Appliances Co. Ltd.
No. 82, Shimenyi Road, JingAn District,
Shanghai, China, P.R.C, Post Code: 200040
Phone: +86 21 6157 3500, Fax: +86 21 6157 3511
E-mail: info@miele.cn, Internet: www.miele.cn

**Hong Kong, China**
Miele (Hong Kong) Ltd.
41/F - 4101, Manhattan Place
23 Wang Tai Road, Kowloon Bay, Hong Kong
Tel: (852) 2610 1025, Fax: (852) 3579 1404
Email: customerservices@miele.com.hk
Website: www.miele.hk

**India**
Miele India Pvt. Ltd.
1st Floor, Copia Corporate Suites,
Commercial Plot 9, Mathura Road, Jasola,
New Delhi - 110025
E-mail: customercare@miele.in, Website: www.miele.in

**Ireland**
Miele Ireland Ltd.
2024 Bianconi Ave., Citywest Business Campus,
Dublin 24
Tel: (01) 461 07 10, Fax: (01) 461 07 97
E-Mail: info@miele.ie, Internet: www.miele-professional.ie

**Malaysia**
Miele Sdn Bhd
Suite 12-2, Level 12
Menara Sapura Kencana Petroleum
Solaris Dutamas No. 1, Jalan Dutamas 1
50480 Kuala Lumpur, Malaysia
Phone: +603-6209-0288
Fax: +603-6205-3768

**New Zealand**
Miele New Zealand Limited
IRD 98 463 631
8 College Hill
Freemans Bay, Auckland 1011, NZ
Tel: 0800 464 353
Internet: www.miele-professional.com.au
E-mail: professional.sales@miele.com.au

**Singapore**
Miele Pte. Ltd.
29 Media Circle, #11-04 ALICE@Mediapolis
Singapore 138565
Tel: +65 6735 1191, Fax: +65 6735 1161
E-Mail: info@miele.com.sg
Internet: www.miele.sg

**South Africa**
Miele (Pty) Ltd
63 Peter Place, Bryanston 2194
P.O. Box 69434, Bryanston 2021
Tel: (011) 875 9000, Fax: (011) 875 9035
E-mail: info@miele.co.za
Internet: www.miele.co.za

**United Arab Emirates**
Miele Appliances LLC
Showroom 1, Eiffel 1 Building
Sheikh Zayed Road, Umm Al Sheif
P.O. Box 114782 - Dubai
Tel. +971 4 3044 999, Fax. +971 4 3418 852
800-MIELE (64353)
E-Mail: info@miele.ae
Website: www.miele.ae

Manufacturer: Miele & Cie. KG, Carl-Miele-Straße 29, 33332 Gütersloh, Germany

Miele

PDR 508 HP P

en-GB

M.-Nr. 13 169 360 / 00 / 002